Advanced Topics in CAD Modelling

Jayanga T. Samarasinghe (PhD Student)

Alan Espino (PhD Student)

Introduction

- Loft
- Sweep
- Revolve

Darpa 5471 1:1

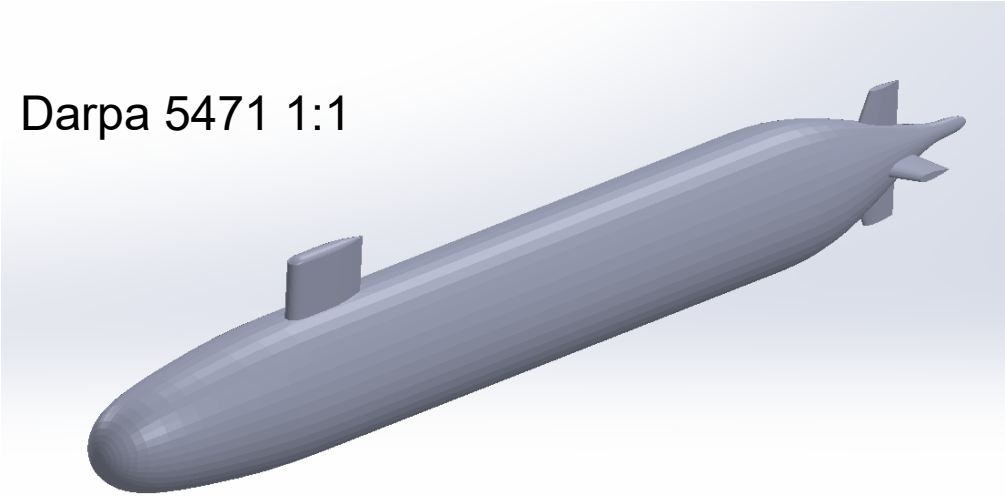

Boeing 737 – 700 1:1

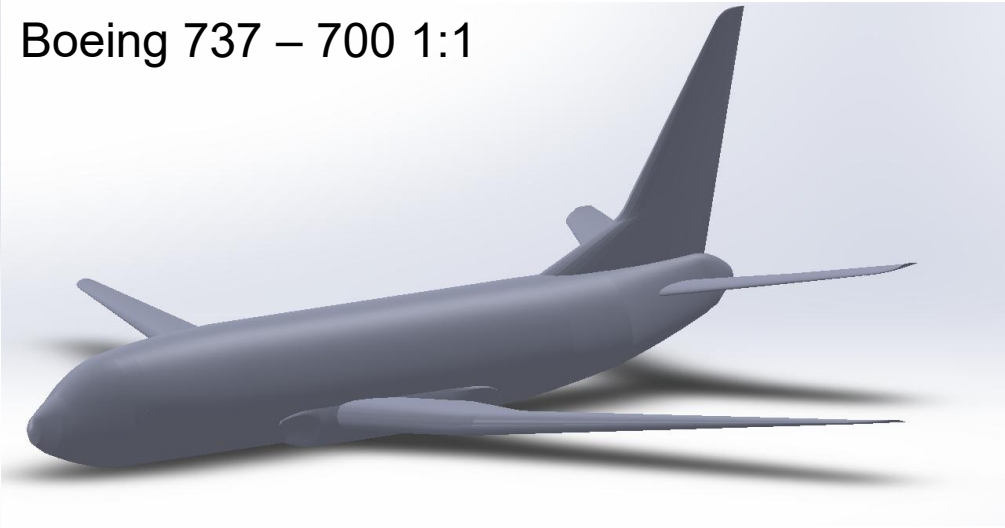

Nozzle 1:1

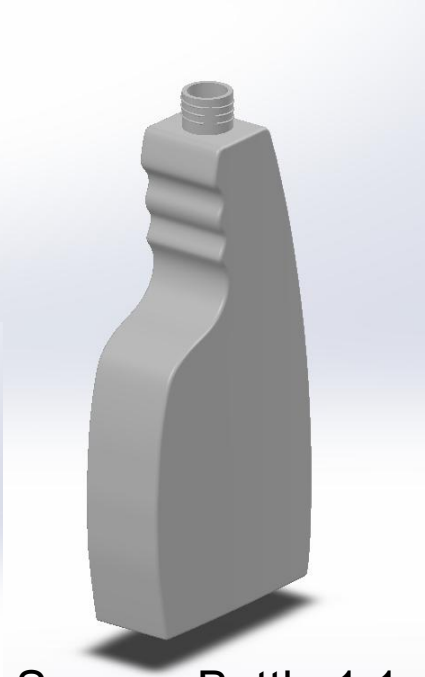

Sprayer Bottle 1:1

Loft

- Lofts blend multiple profiles, and transition them into smooth shapes

    1. Loft Using Rail Guides
    2. Centerline Loft
    3. Loft to a Point
    4. Area Loft

Loft Using Rail Guides

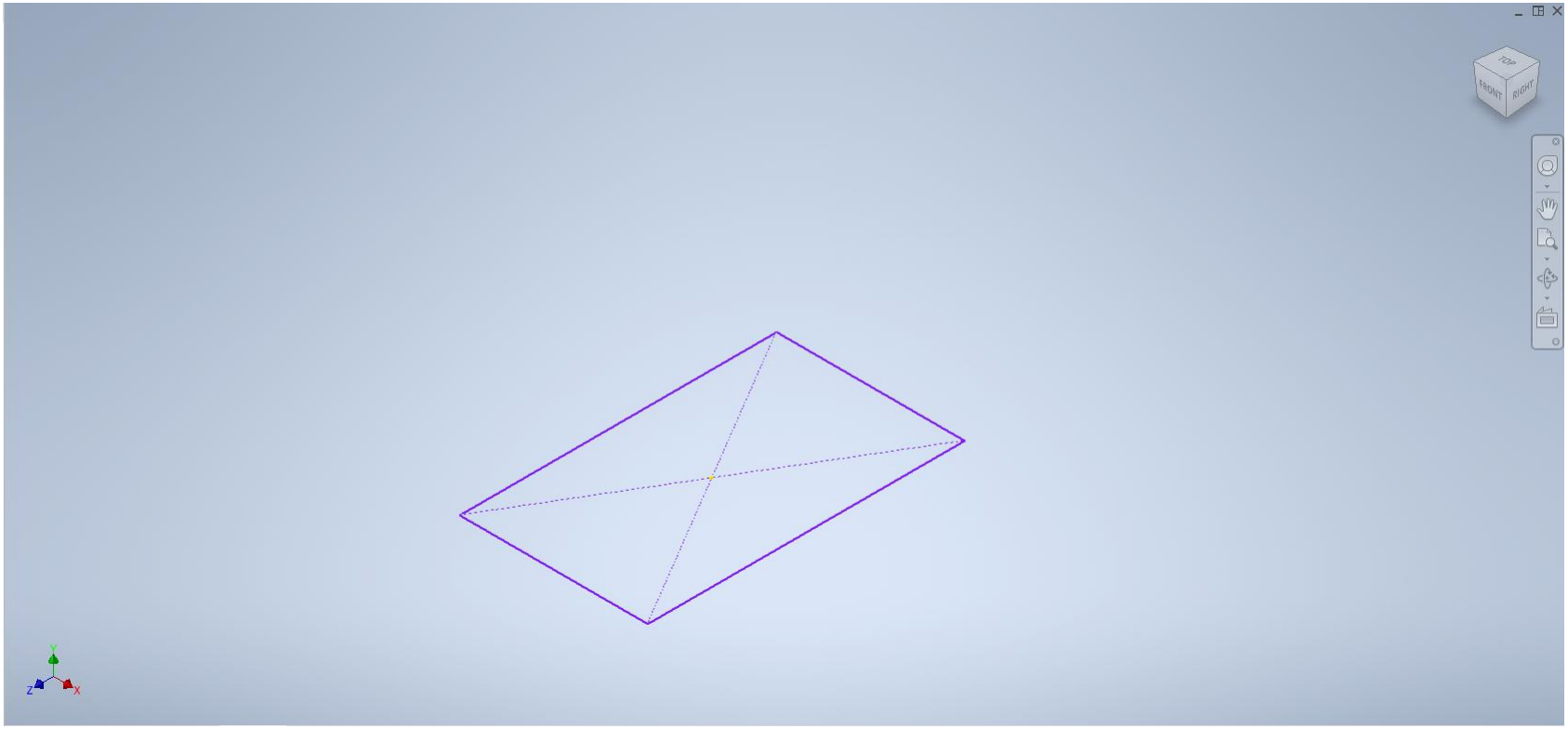

Loft Using Rail Guides

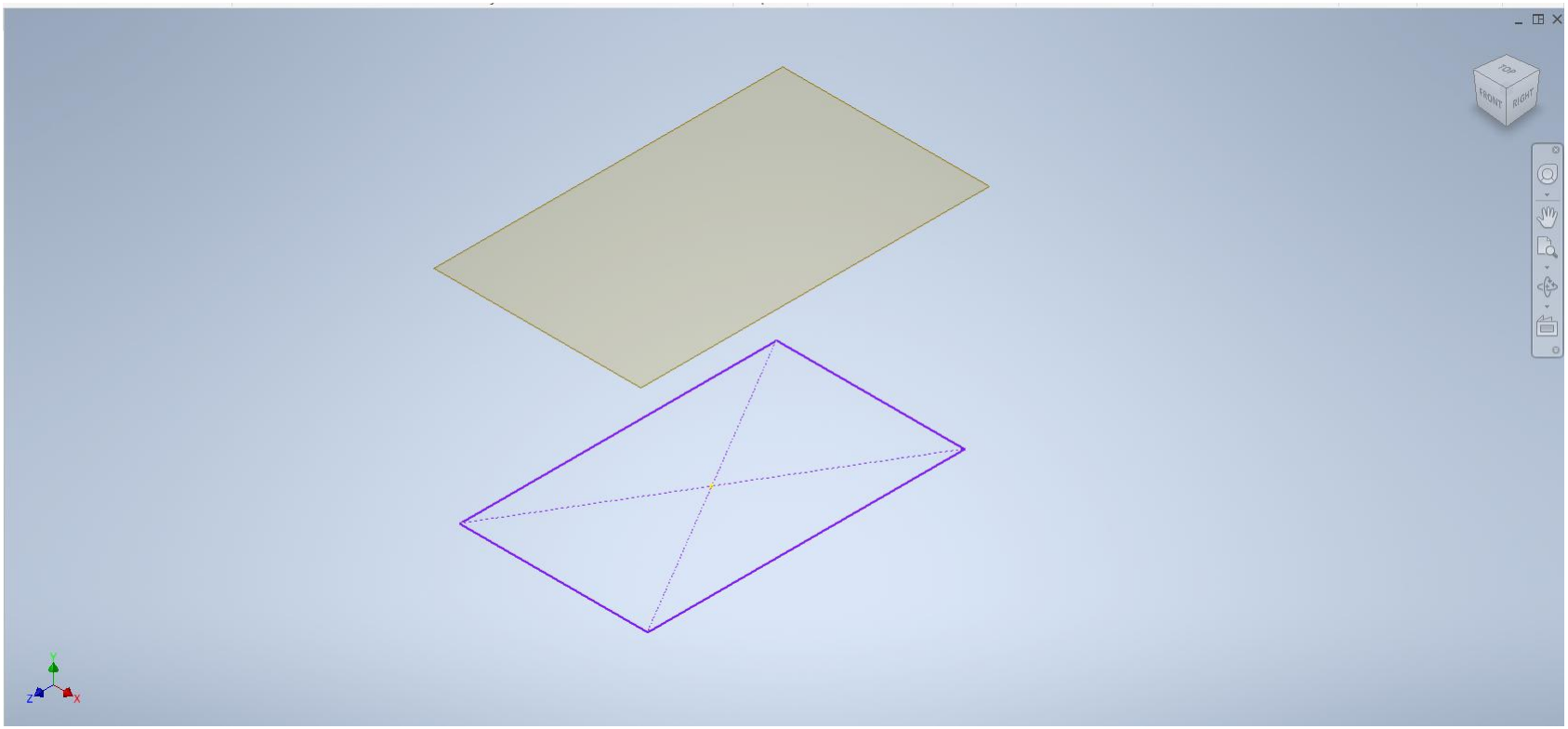

Loft Using Rail Guides

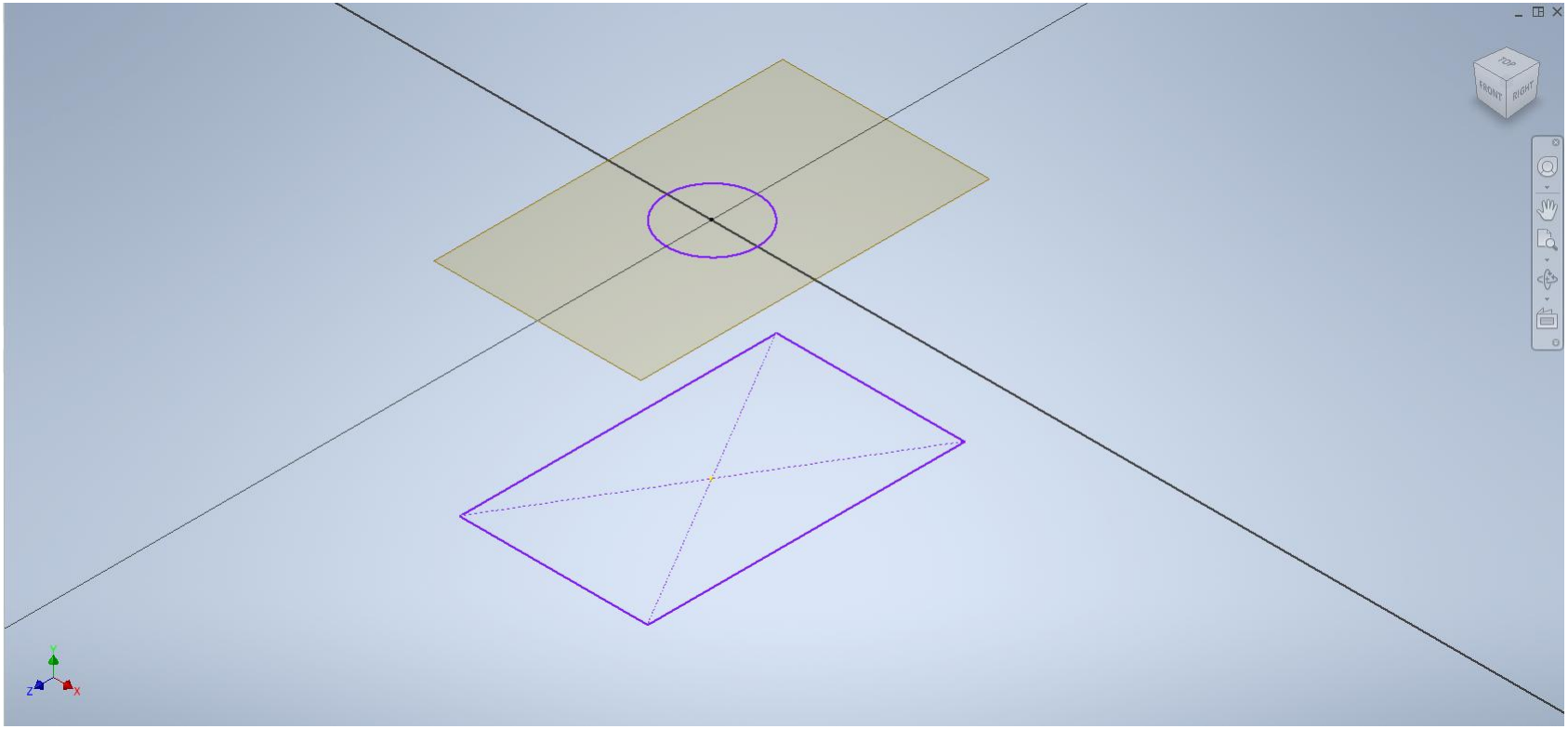

Loft Using Rail Guides

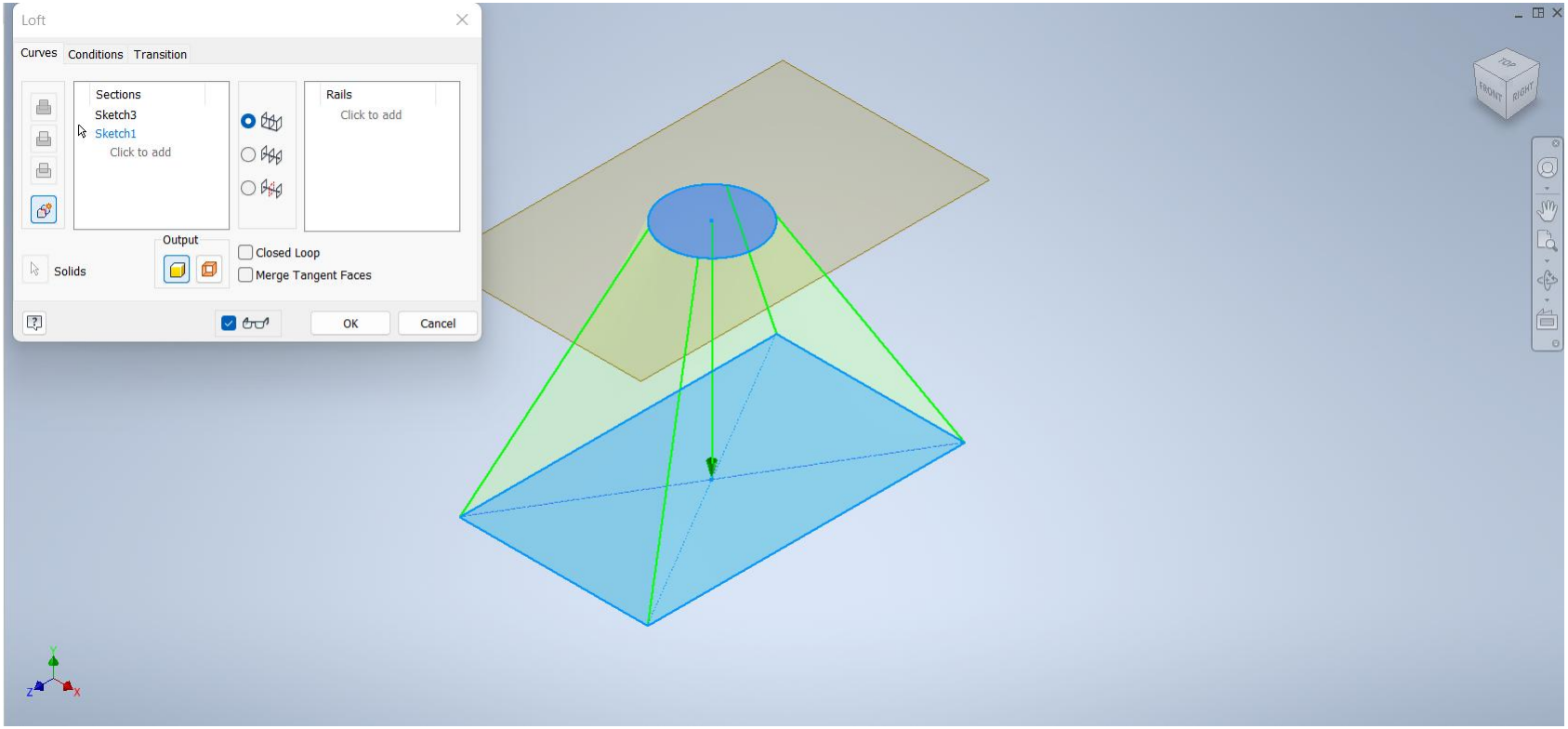

Loft Using Rail Guides

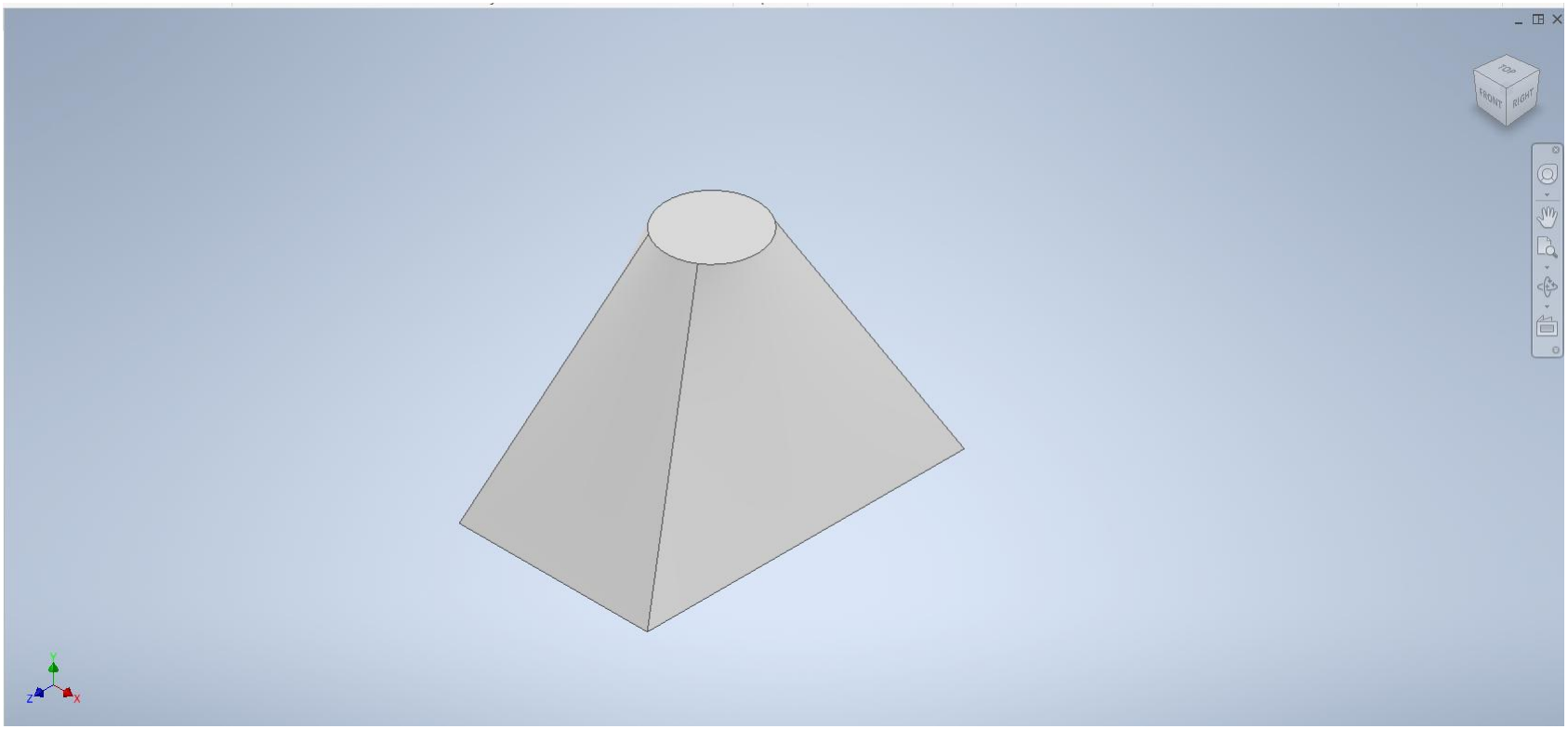

Loft Using Rail Guides

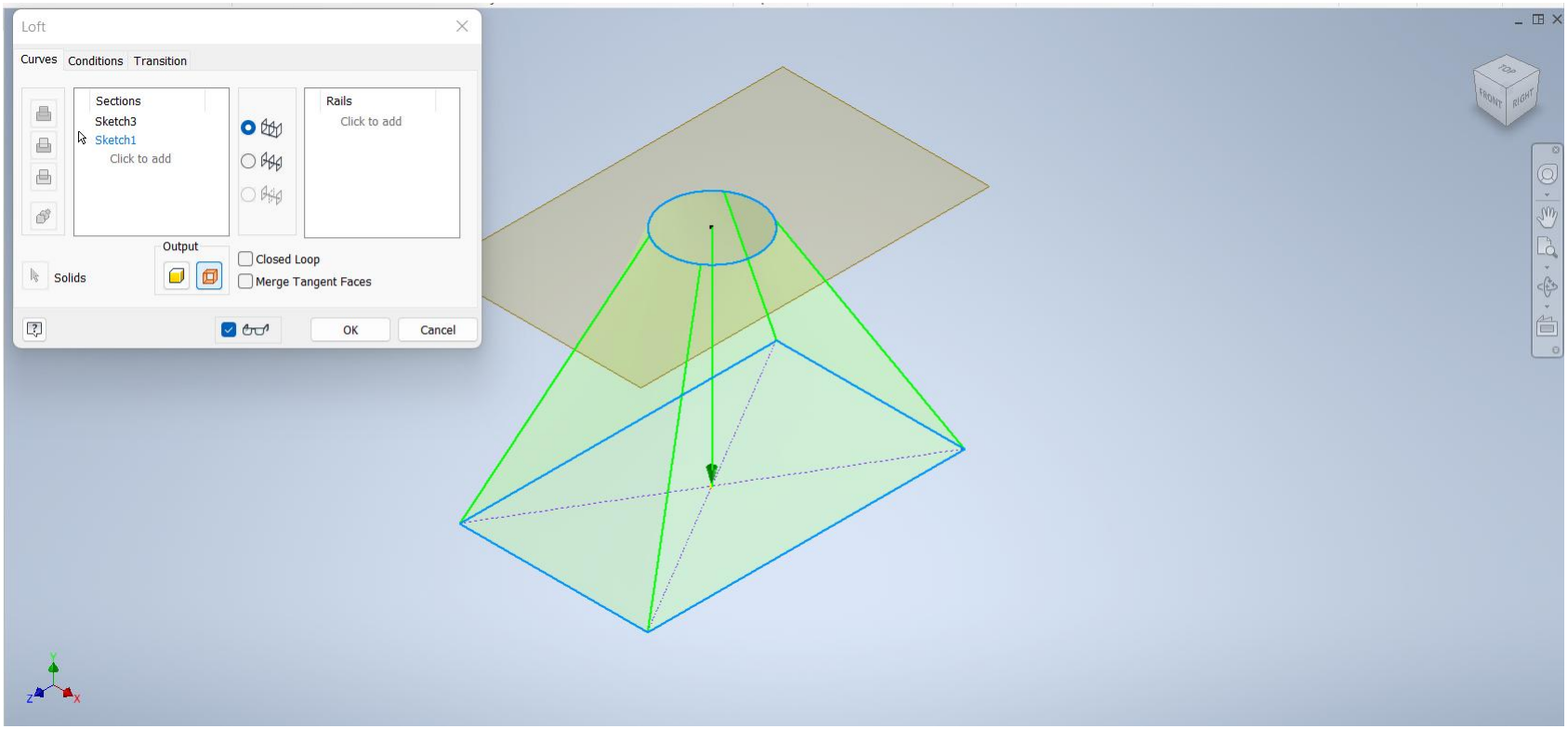

Loft Using Rail Guides

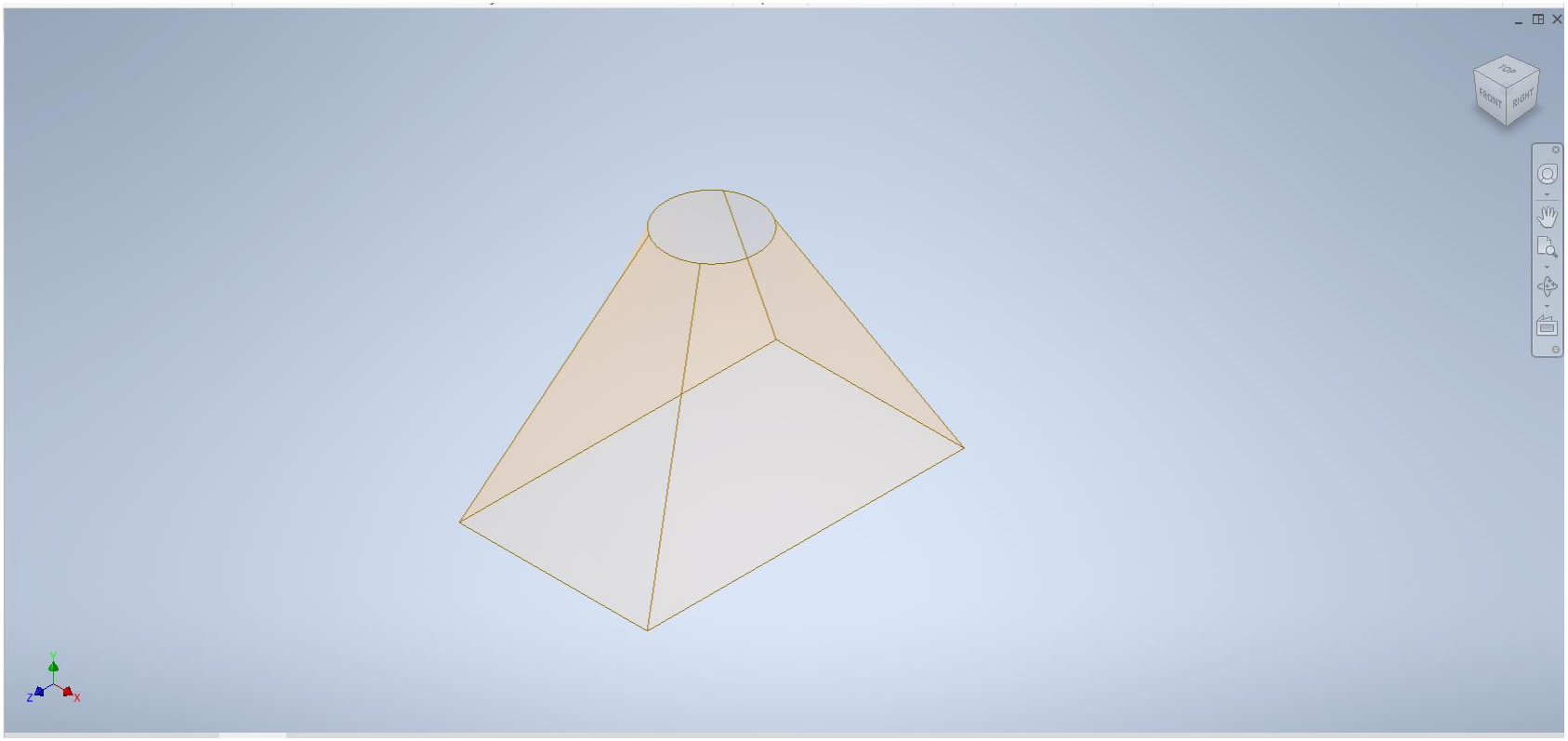

Centerline Loft

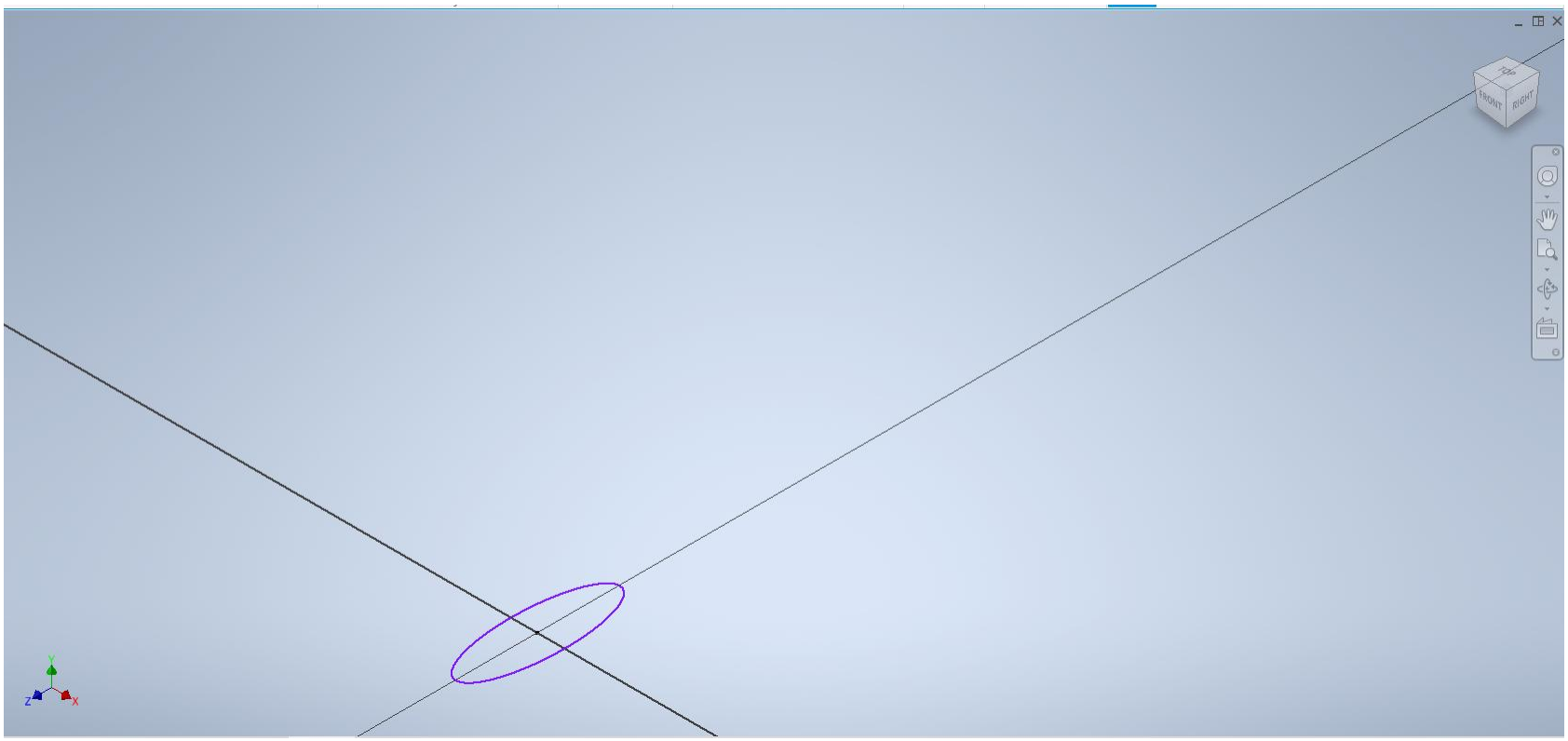

Centerline Loft

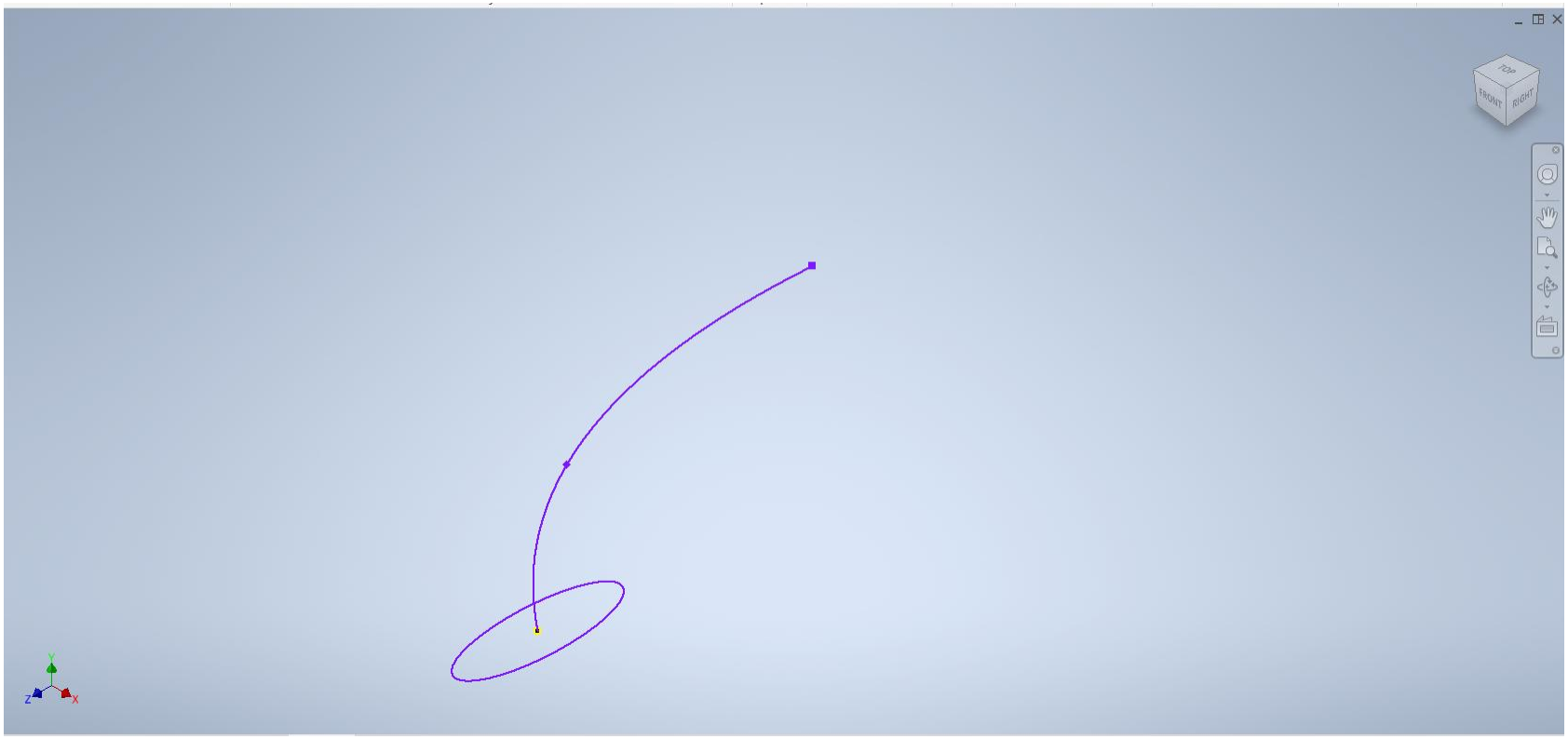

Centerline Loft

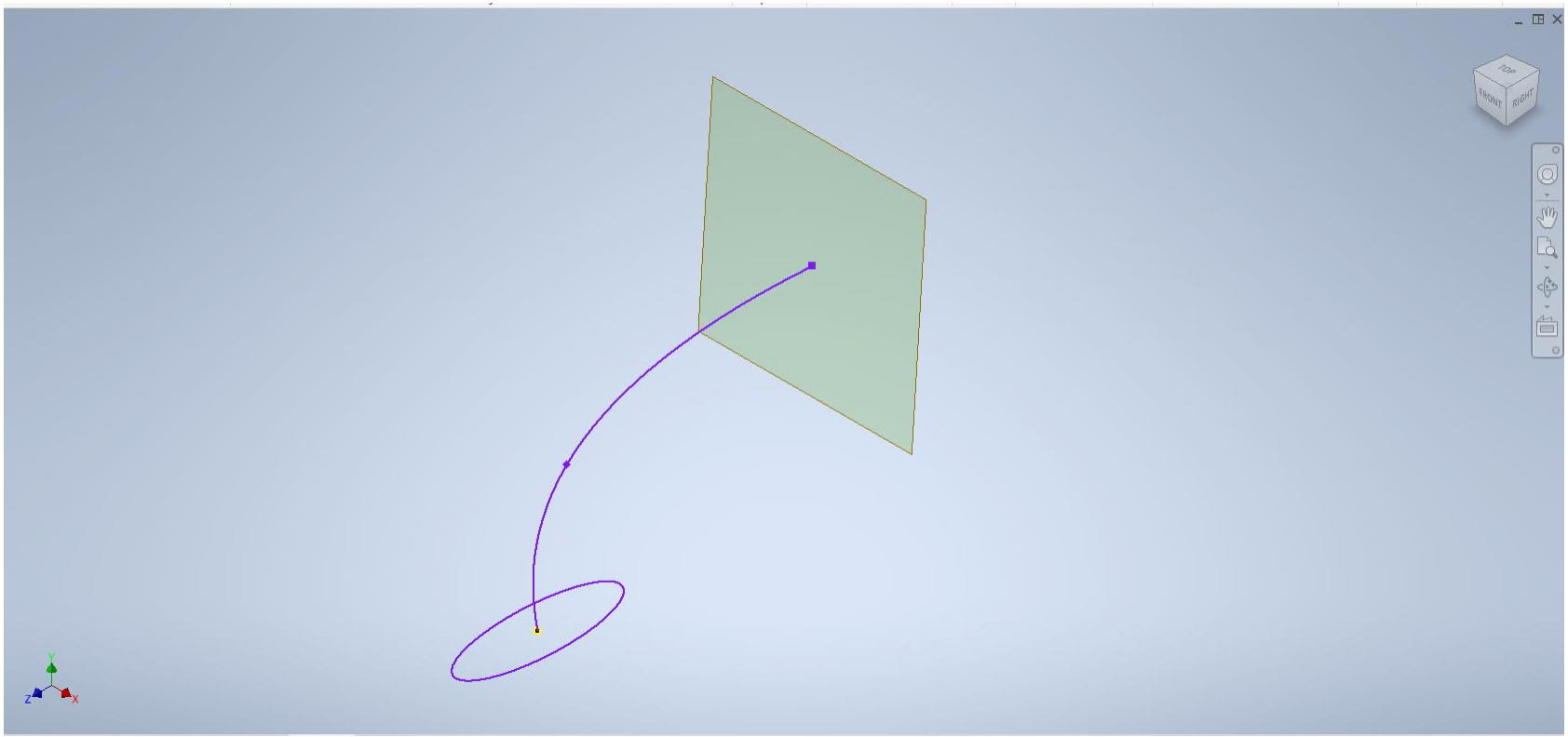

Centerline Loft

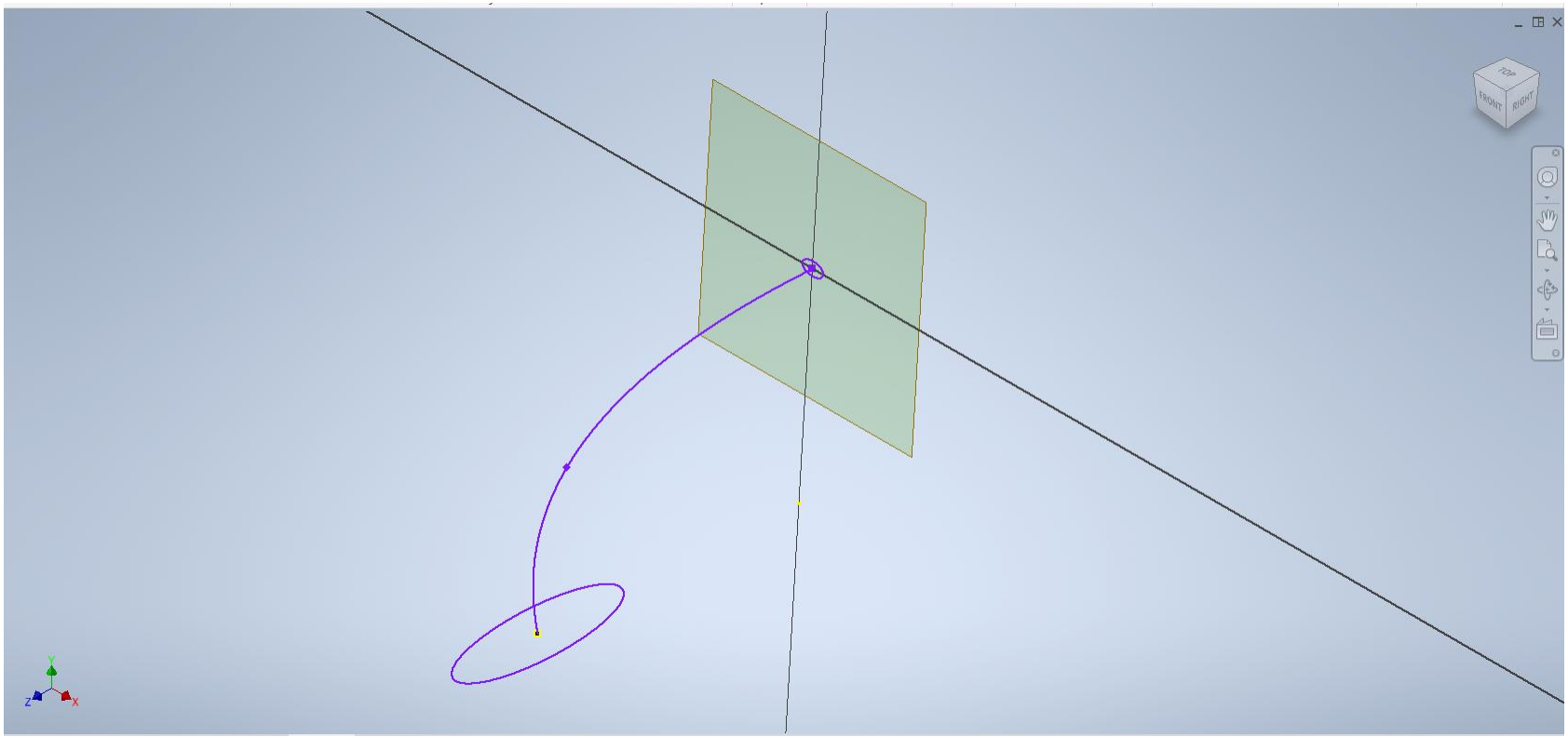

Centerline Loft

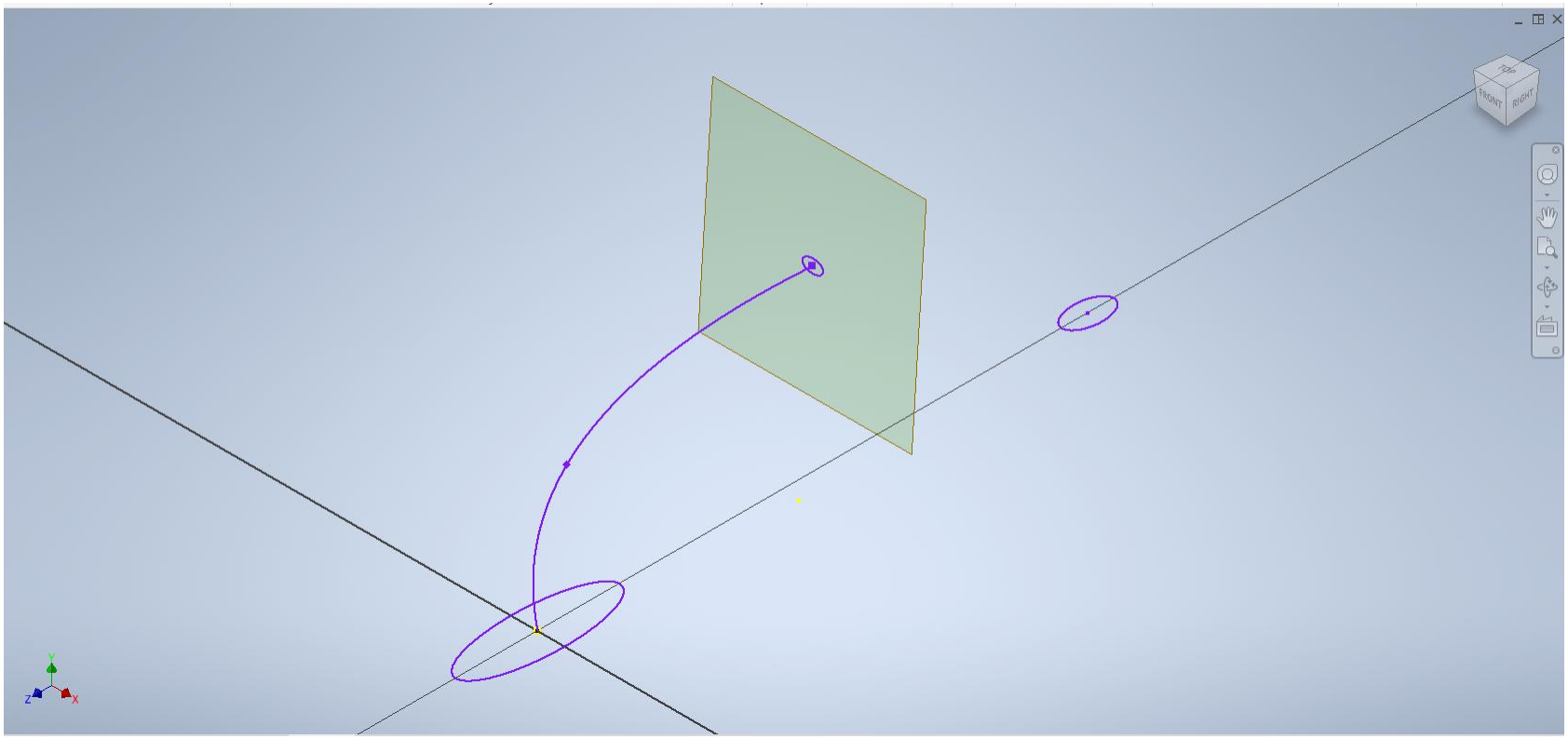

Centerline Loft

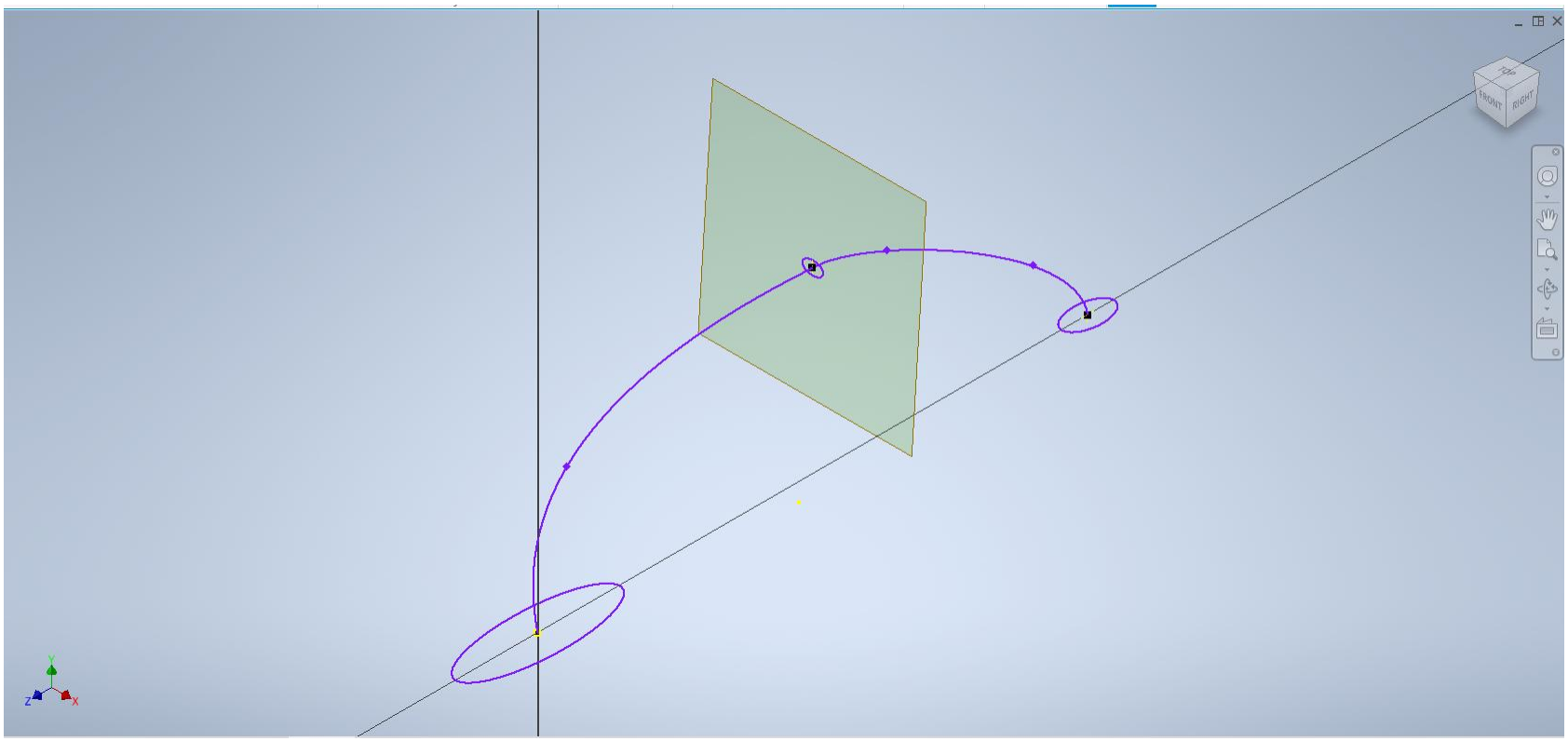

Centerline Loft

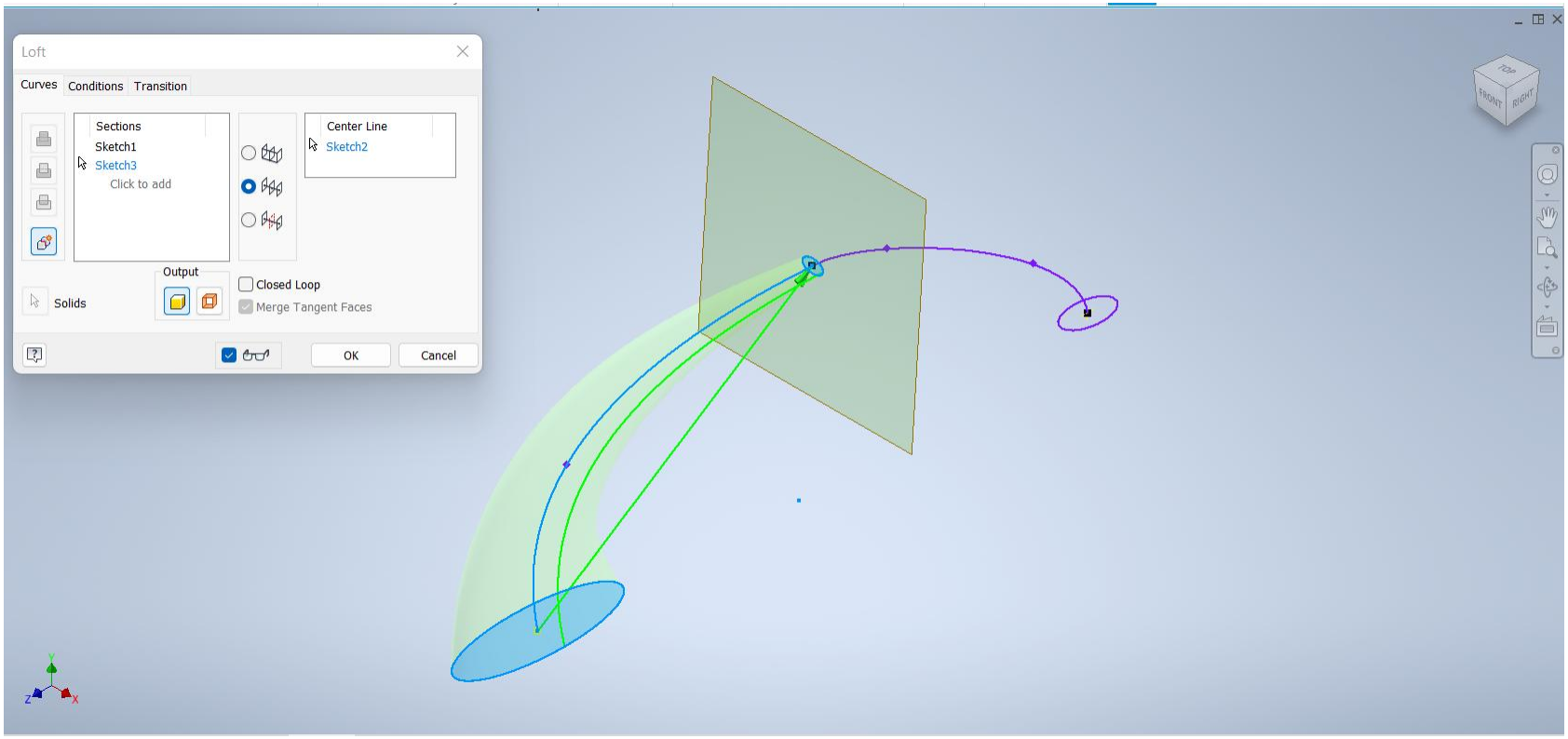

Centerline Loft

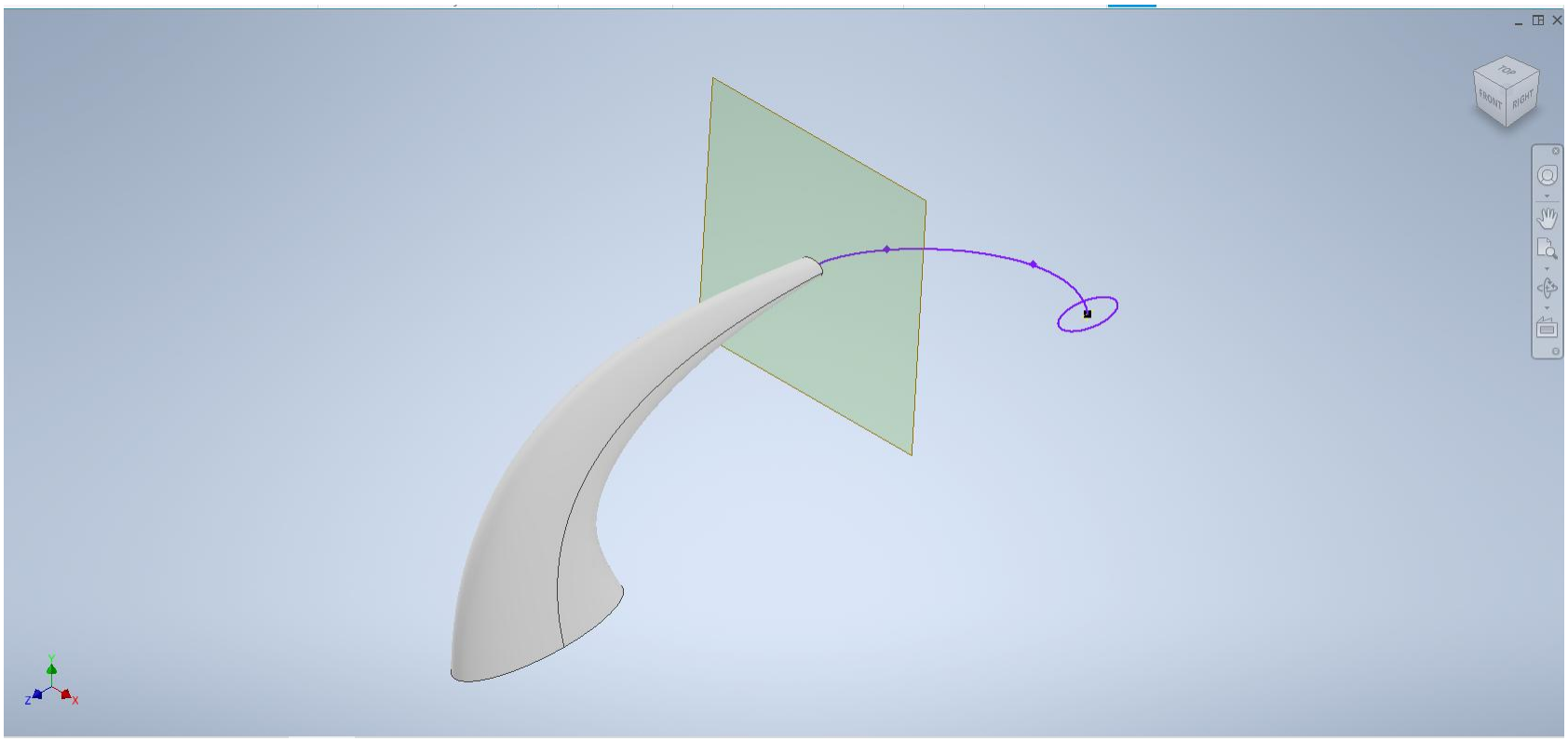

Centerline Loft

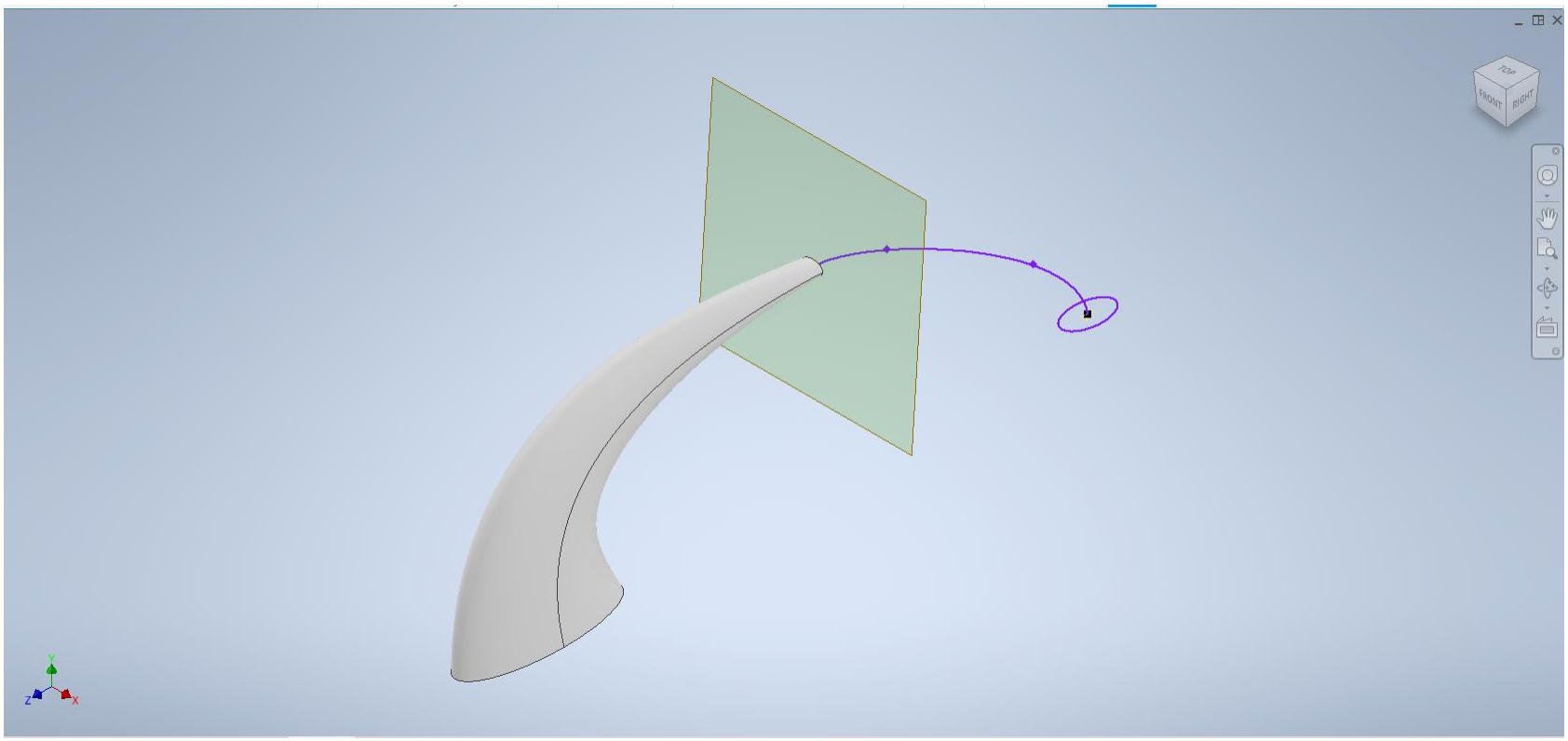

Centerline Loft

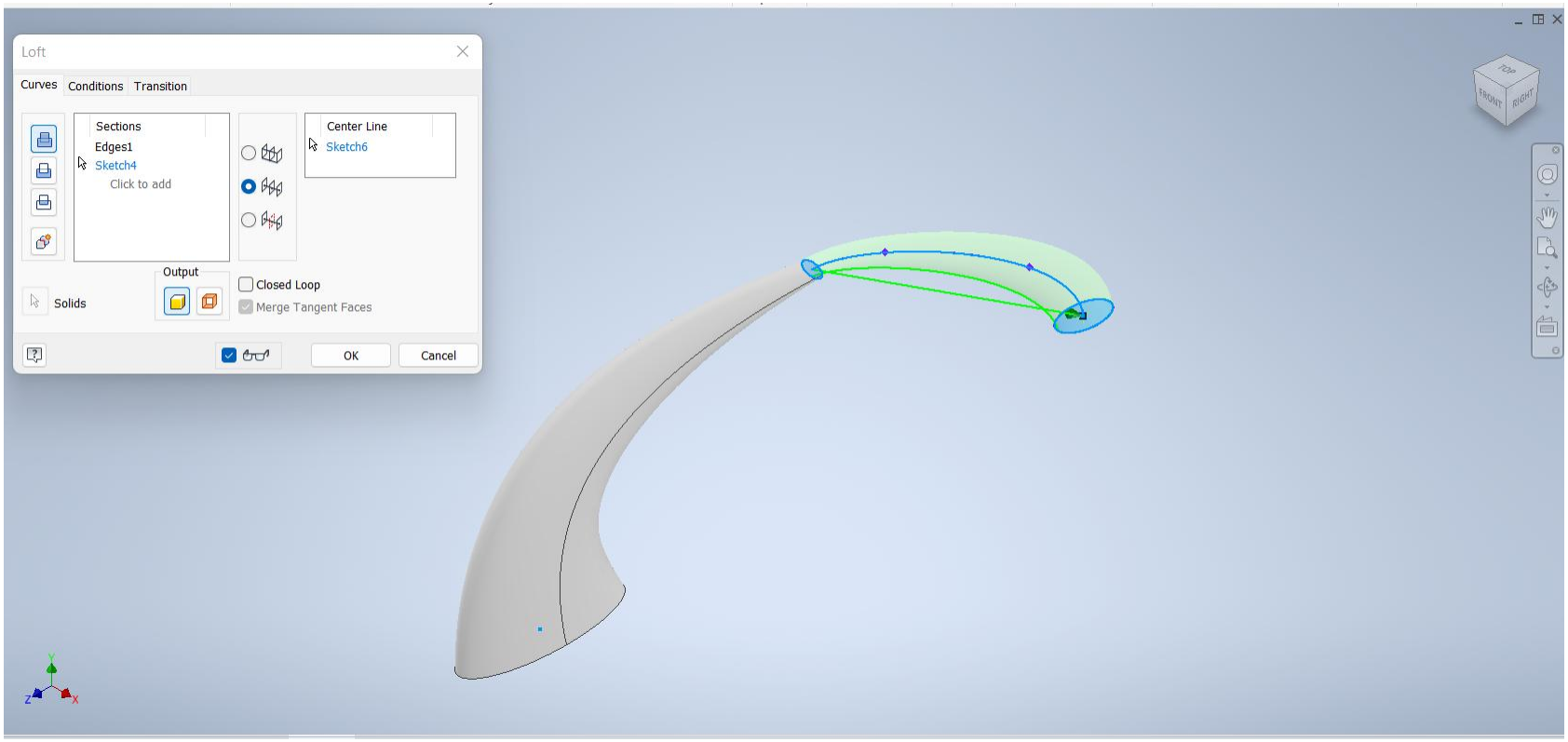

Centerline Loft

Loft to a Point

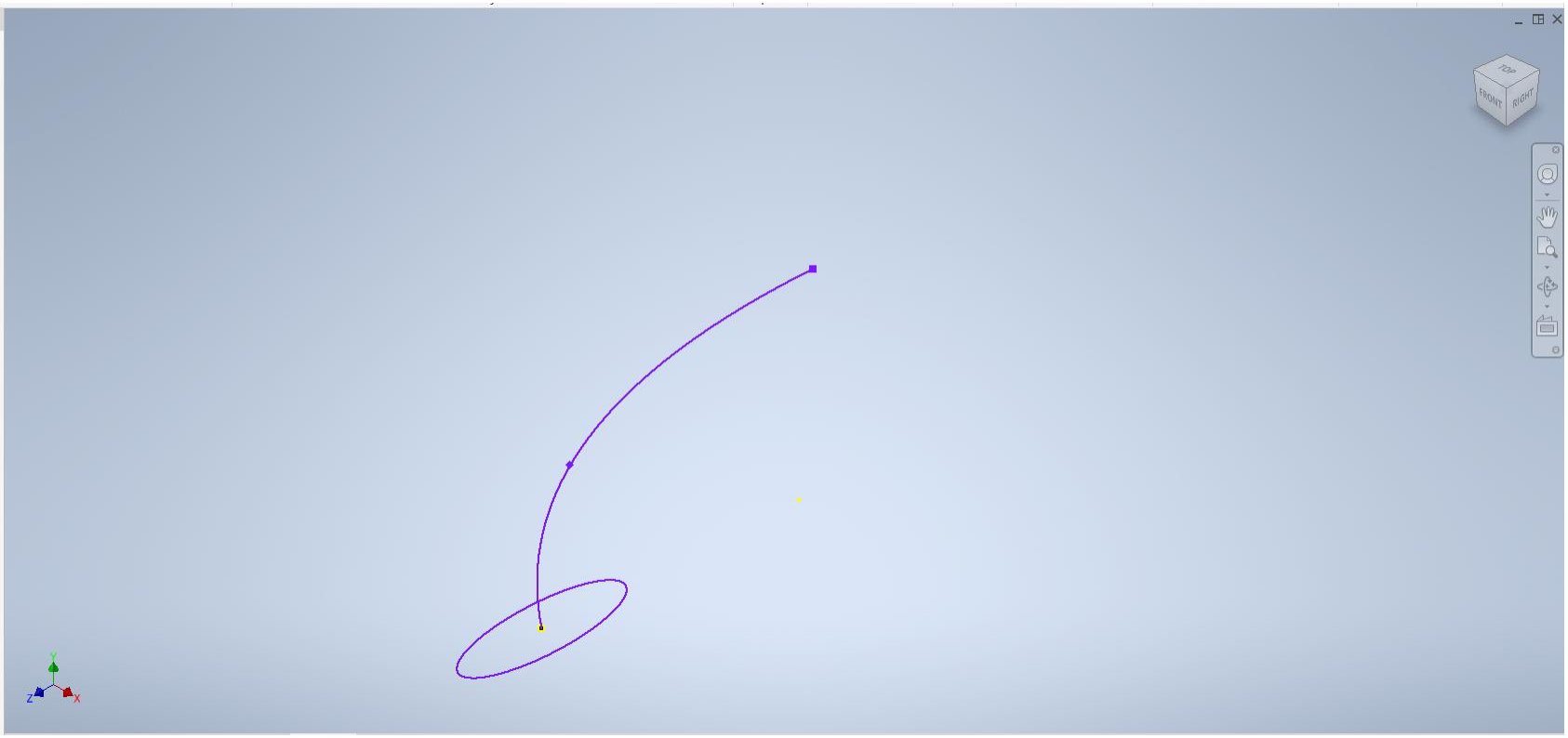

Loft to a Point

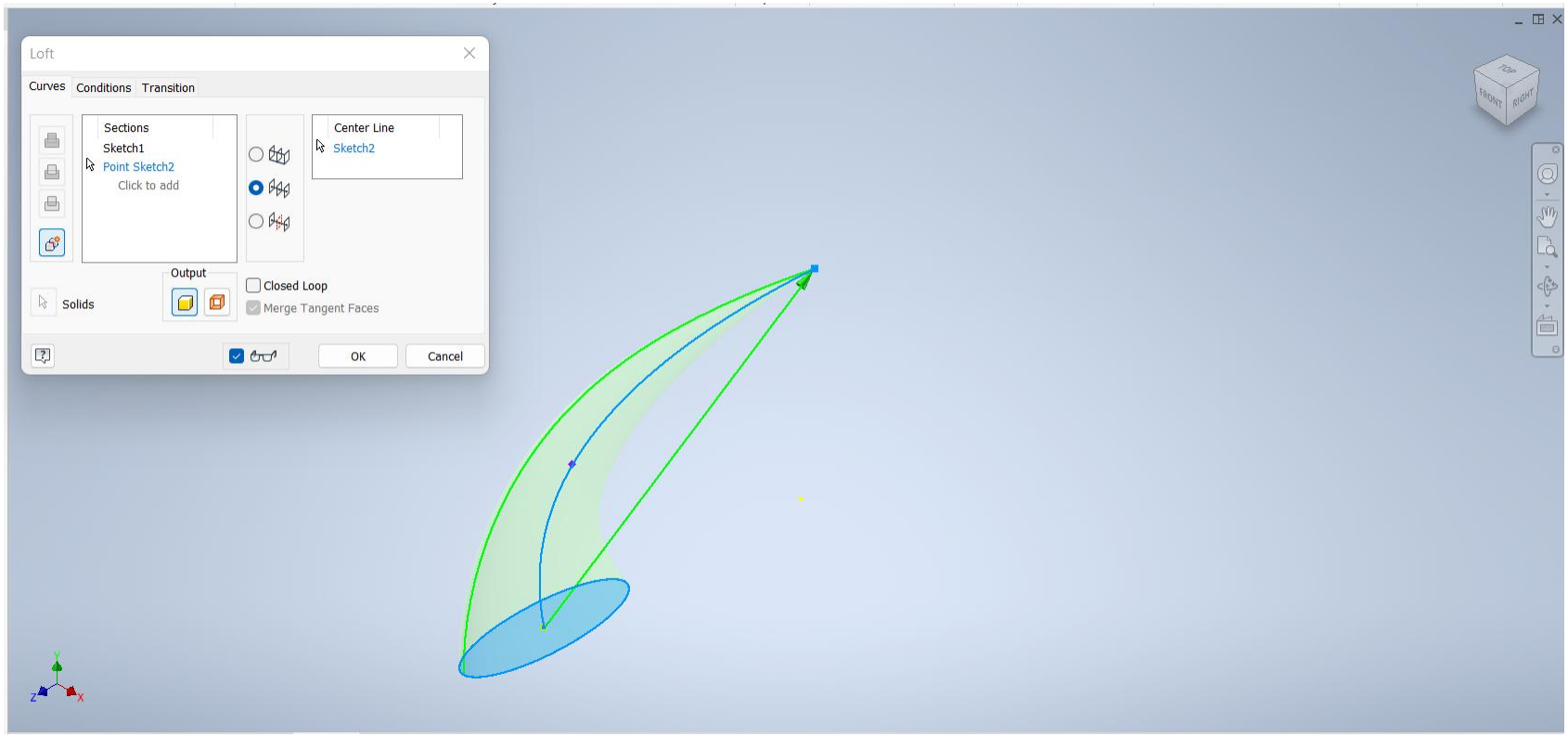

Loft to a Point

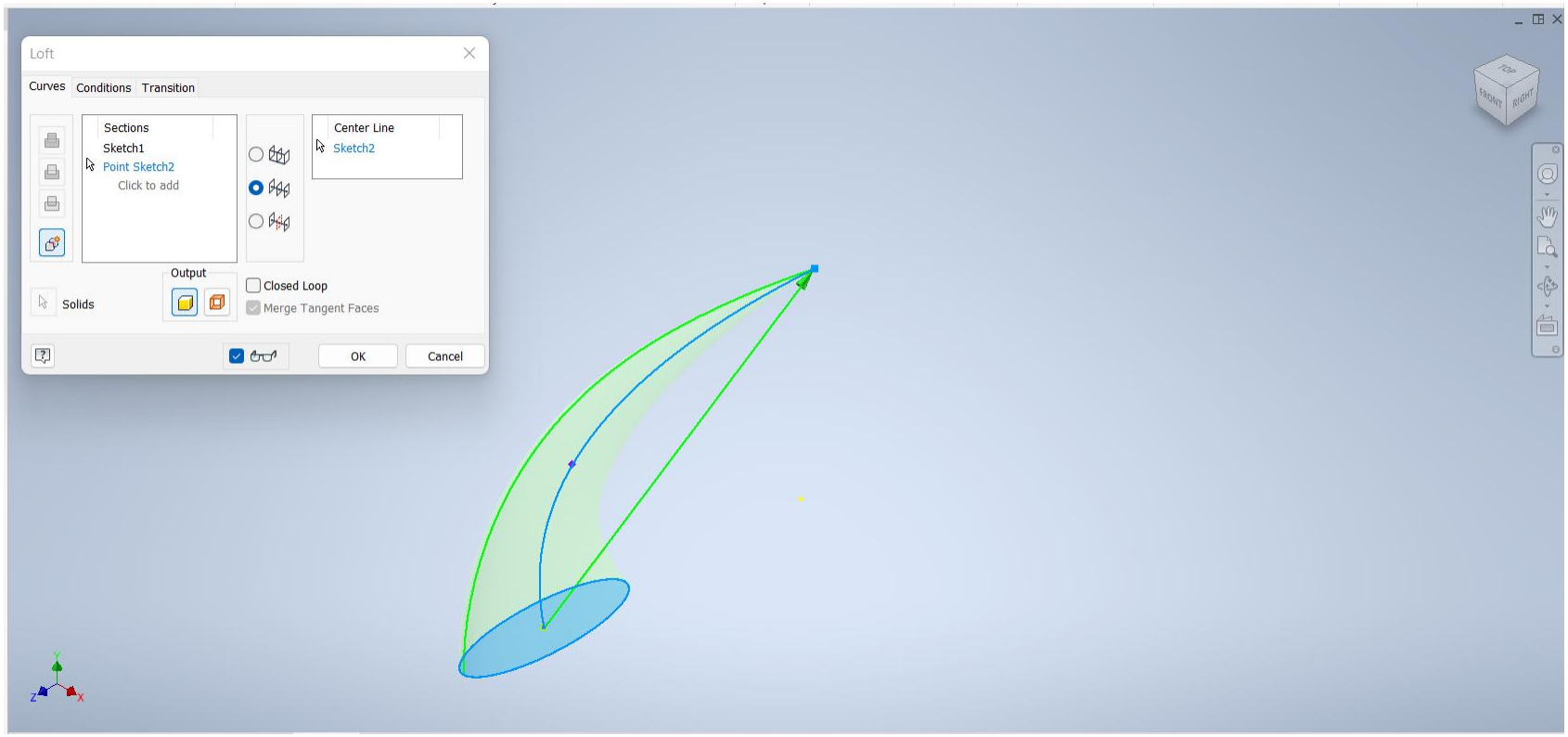

Loft to a Point

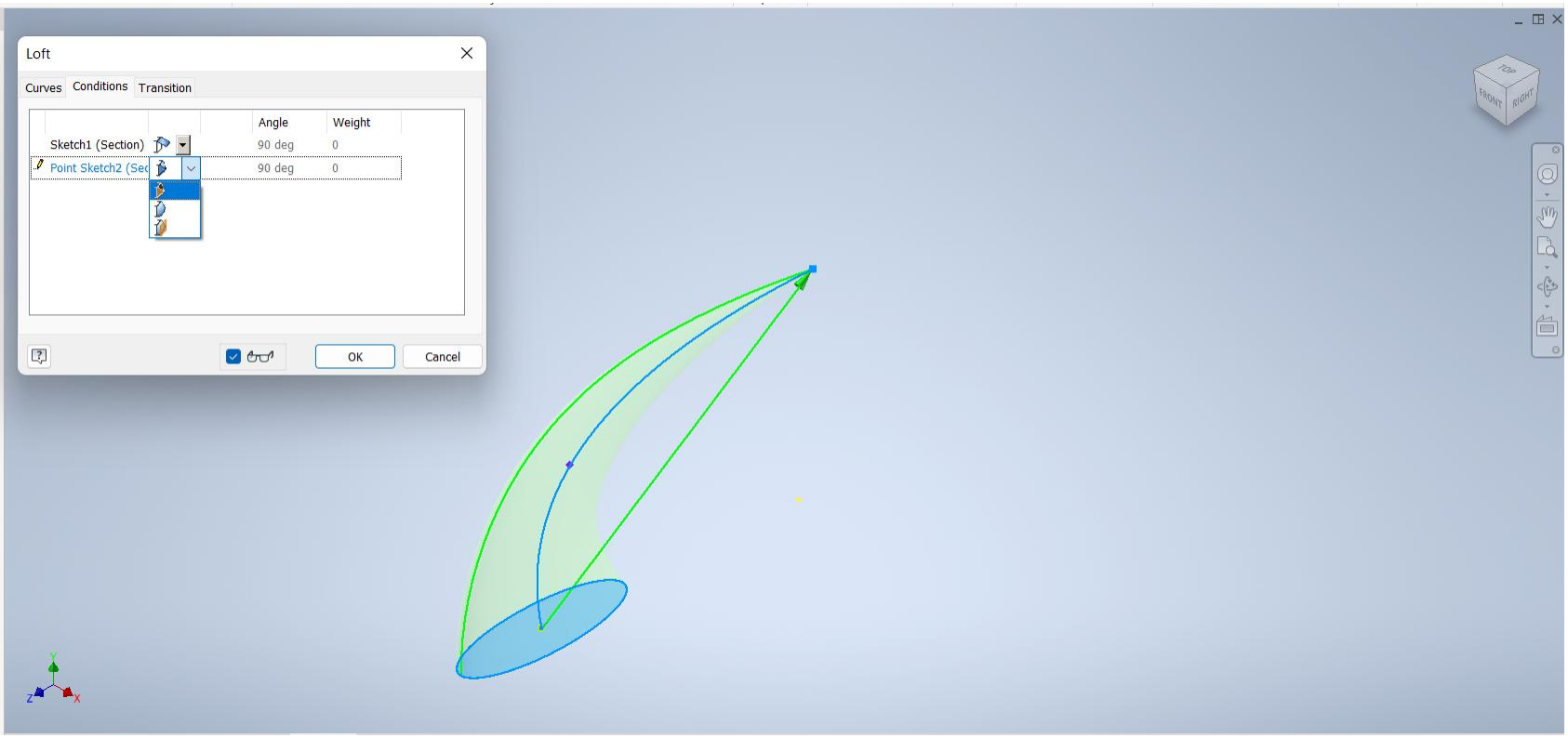

Loft to a Point

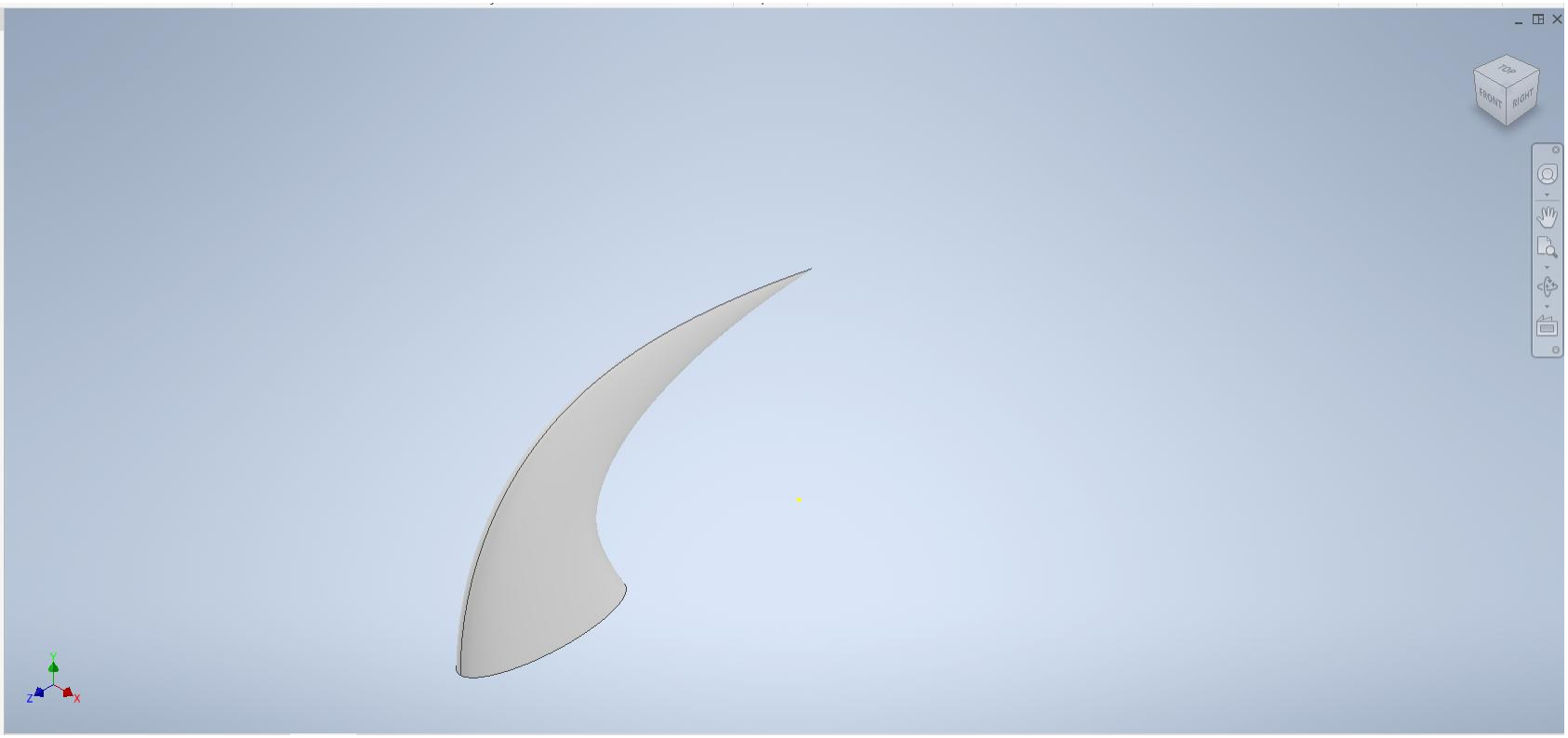

Loft to a Point

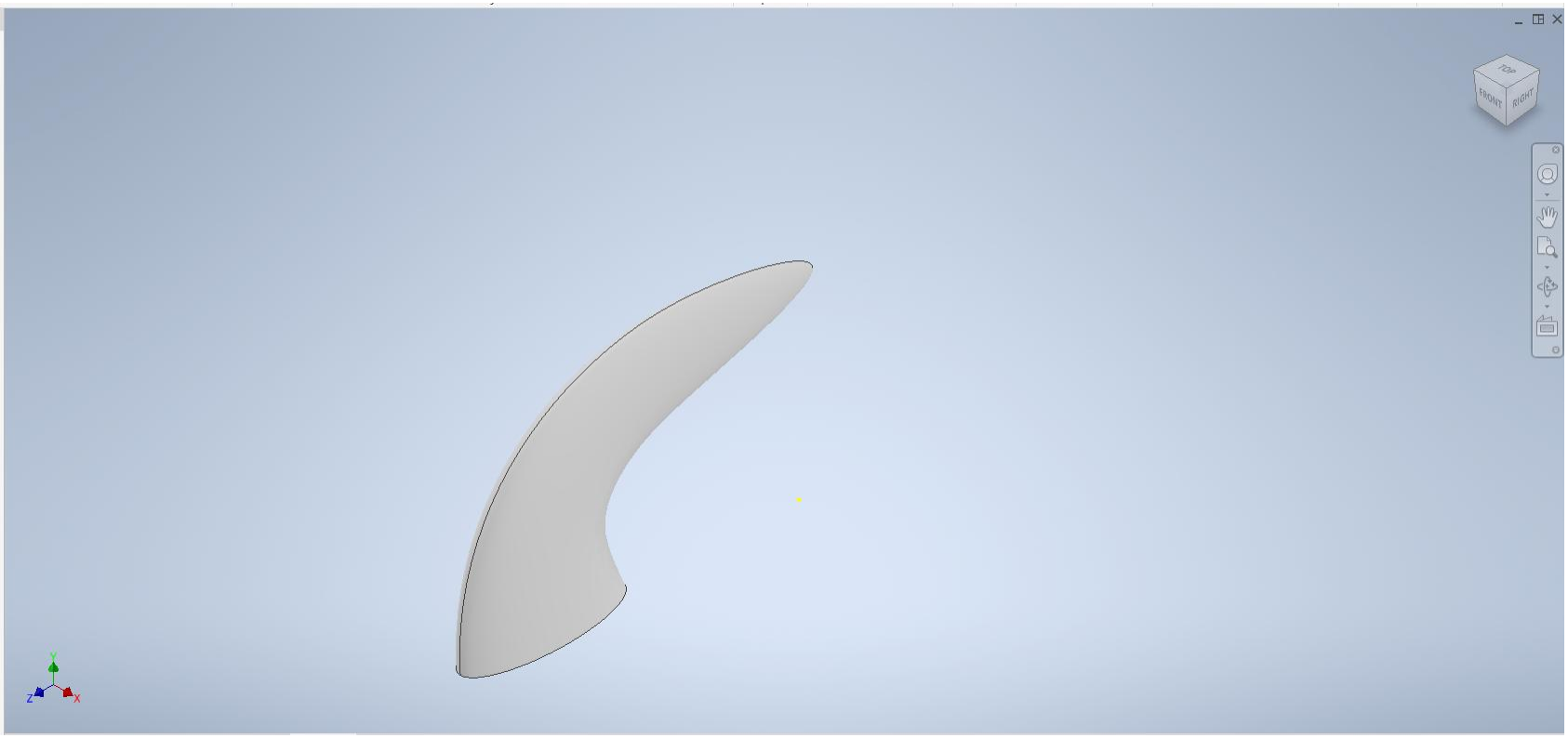

Area Loft

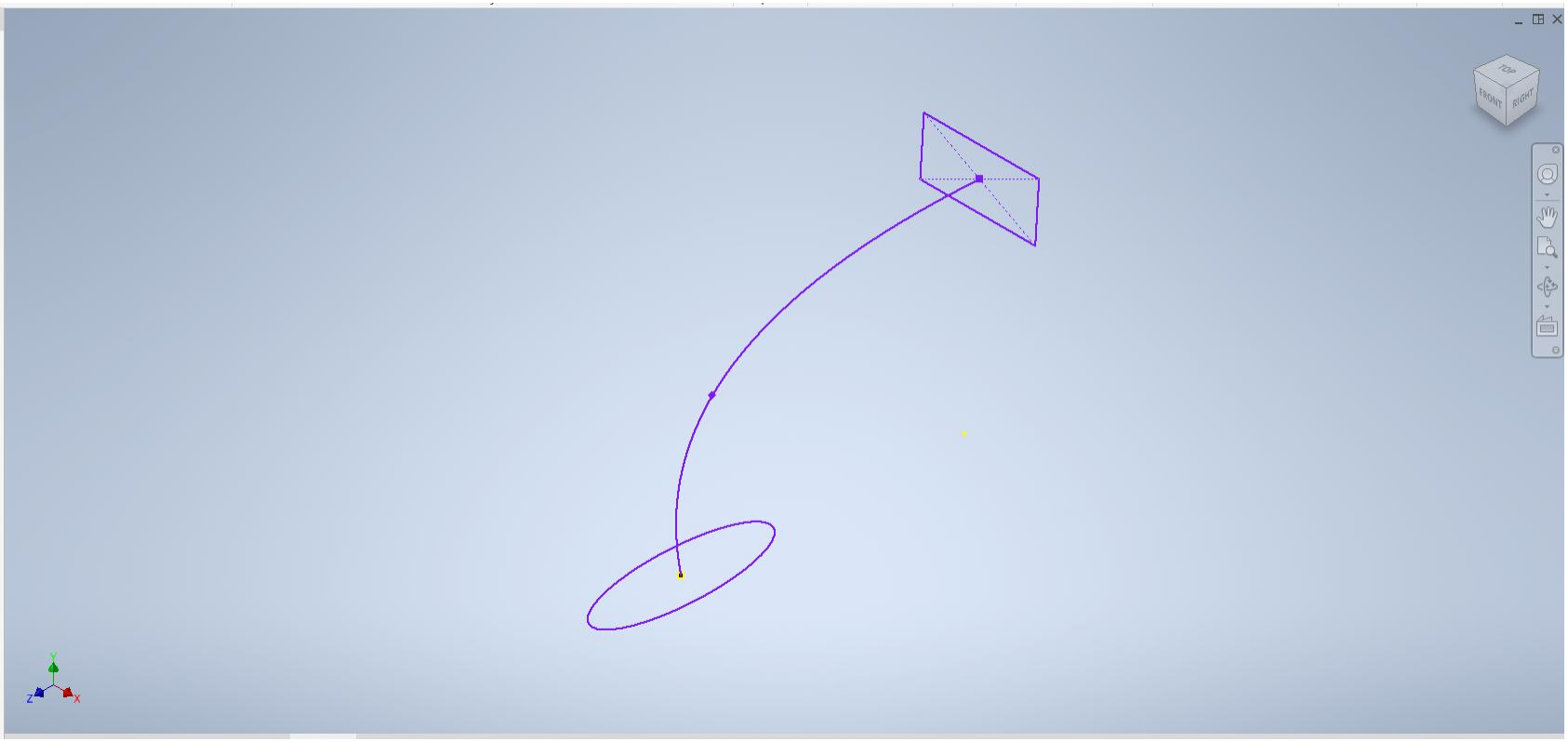

Can define the area of each section at specific points along its path or centerline.

Area Loft

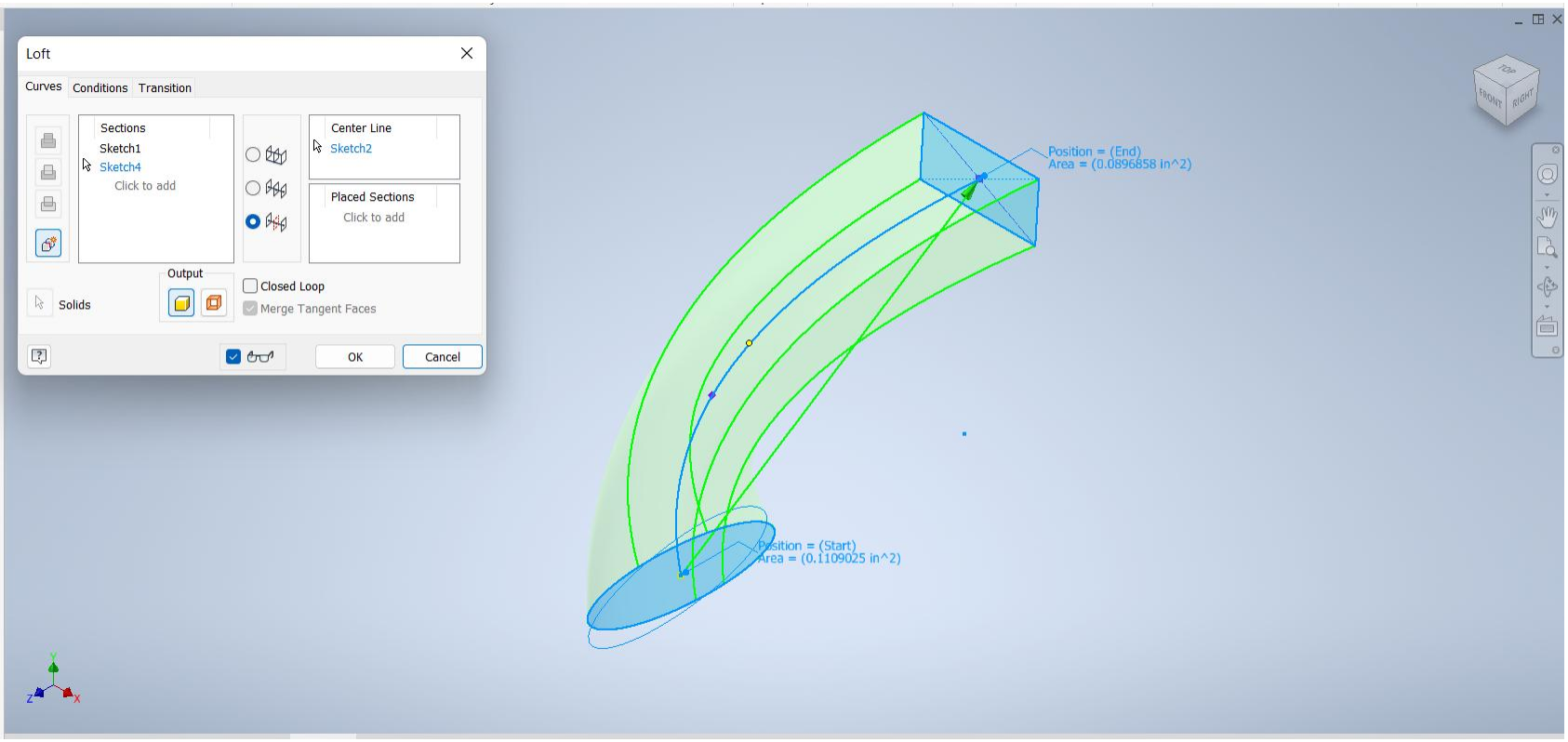
Loft
Curves
Conditions
Transition
Sections
Sketch1
Sketch4
Click to add
Center Line
Sketch2
Placed Sections
Click to add
Output
Solids
Closed Loop
Merge Tangent Faces
OK
Cancel
Position = (End)
Area = (0.0896858 in^2)
Position = (Start)
Area = (0.1109025 in^2)

Area Loft

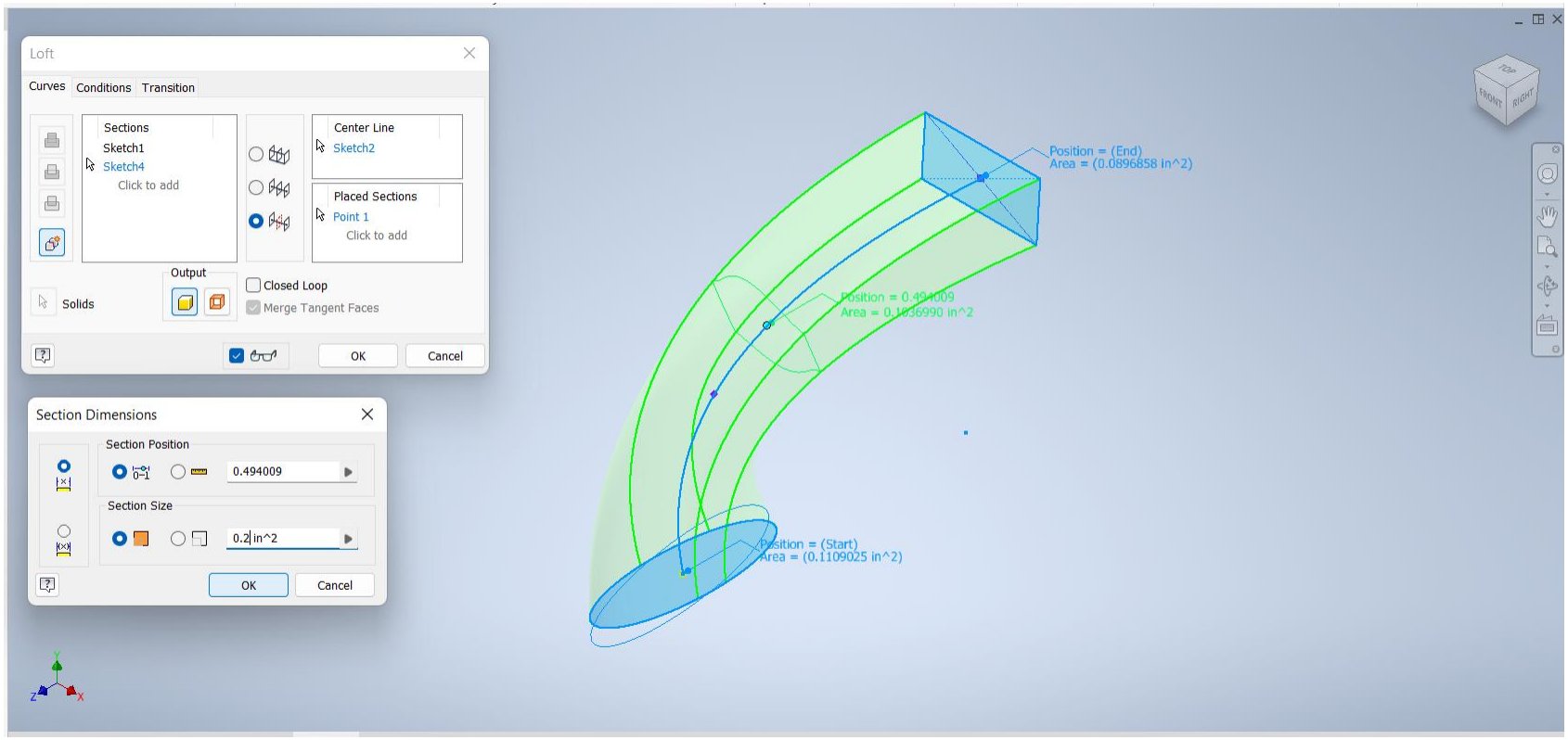
Loft
Curves
Conditions
Transition
Sections
Sketch1
Sketch4
Click to add
Center Line
Sketch2
Placed Sections
Point 1
Click to add
Output
Solids
Closed Loop
Merge Tangent Faces
OK
Cancel
Section Dimensions
Section Position
0.494009
Section Size
0.2 in^2
OK
Cancel
Position = (End)
Area = (0.0896858 in^2)
Position = 0.494009
Area = 0.1036990 in^2
Position = (Start)
Area = (0.1109025 in^2)

Area Loft

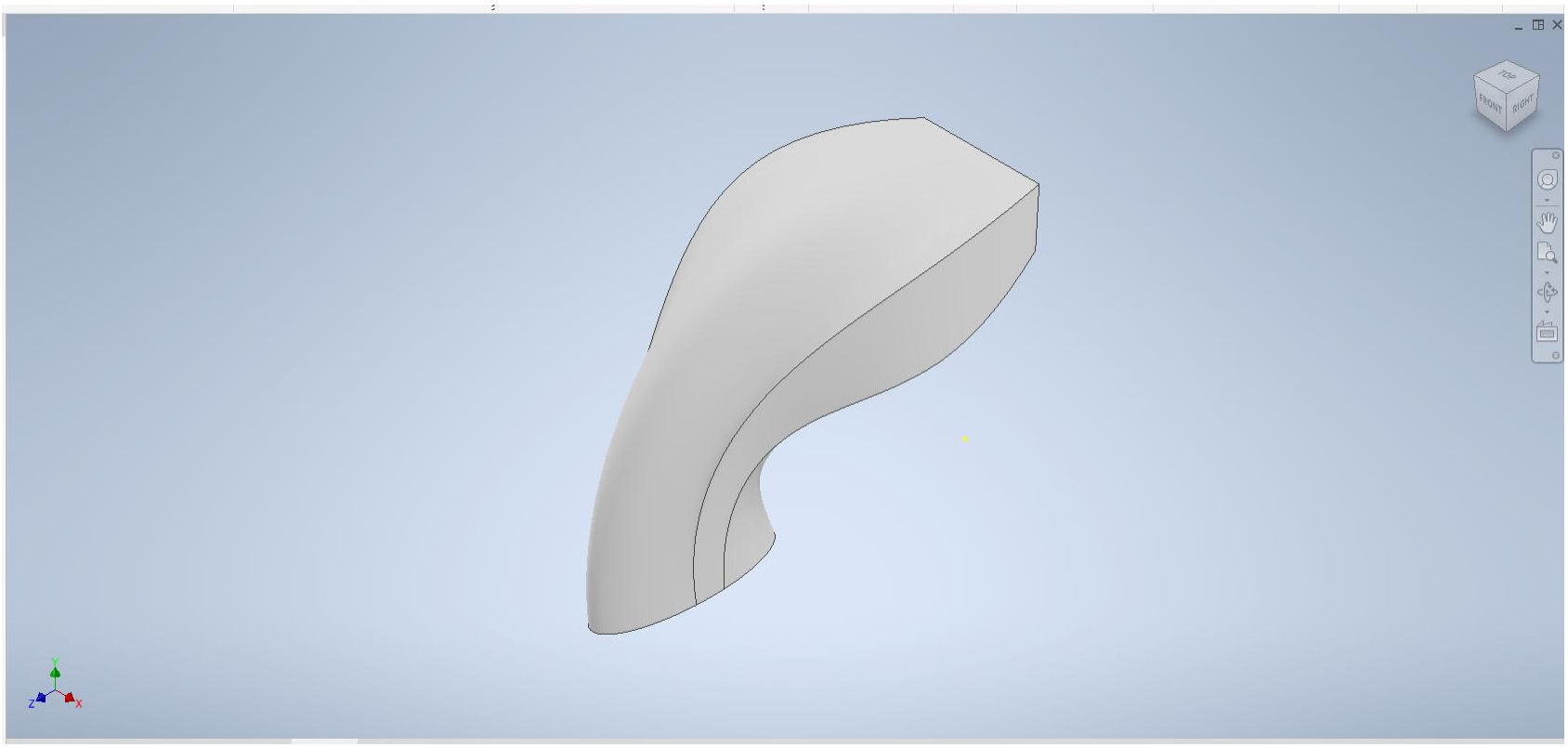

Sweep

- Sweeps one or more sketch profiles or a solid toolbody along a selected path to create a feature or body
  1. Sweep a Toolbody Along a Path
  2. Sweep a Profile Along a Path
  3. Sweep a Profile along a Path and Guide Rail

Sweep a Toolbody Along a Path

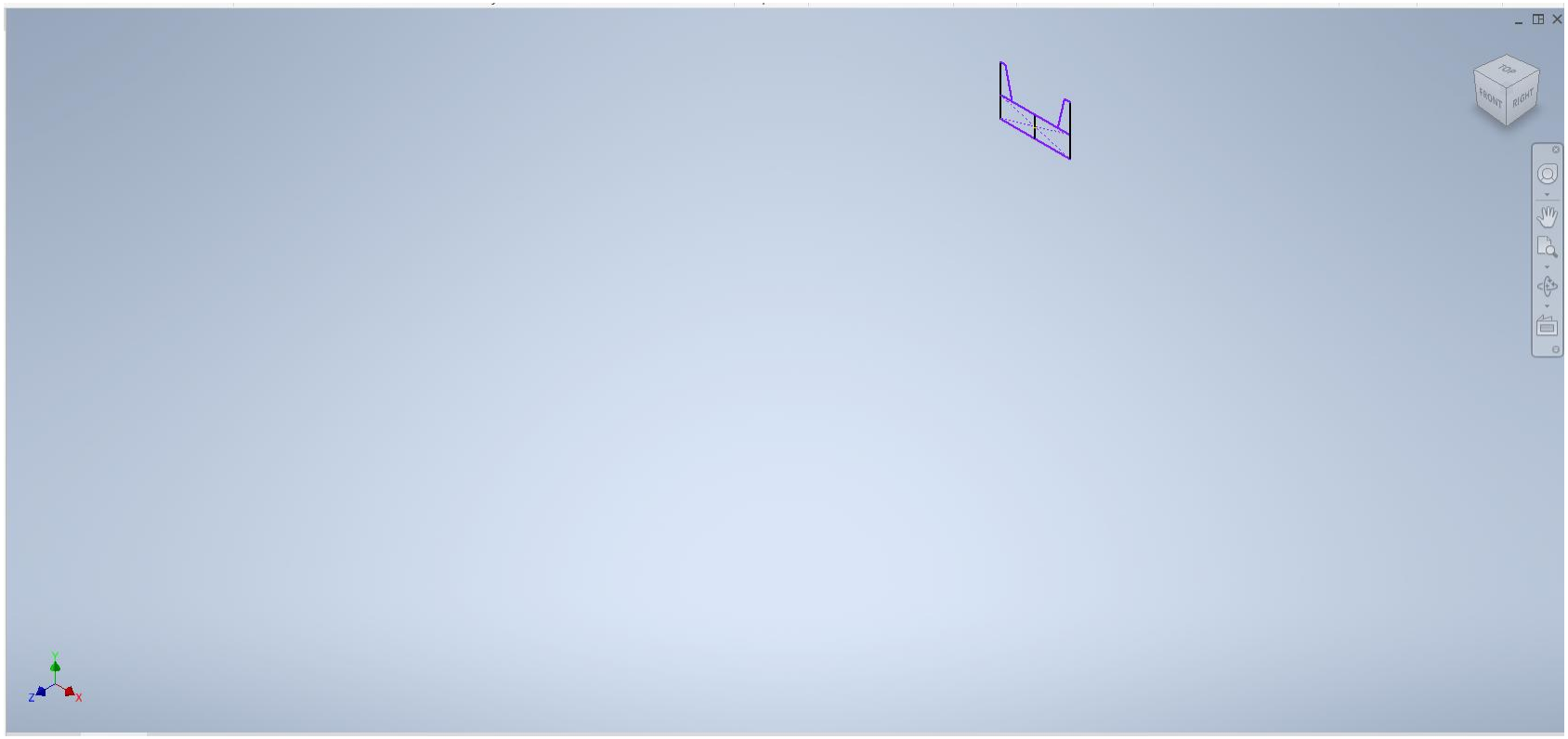

Sweep a Toolbody Along a Path

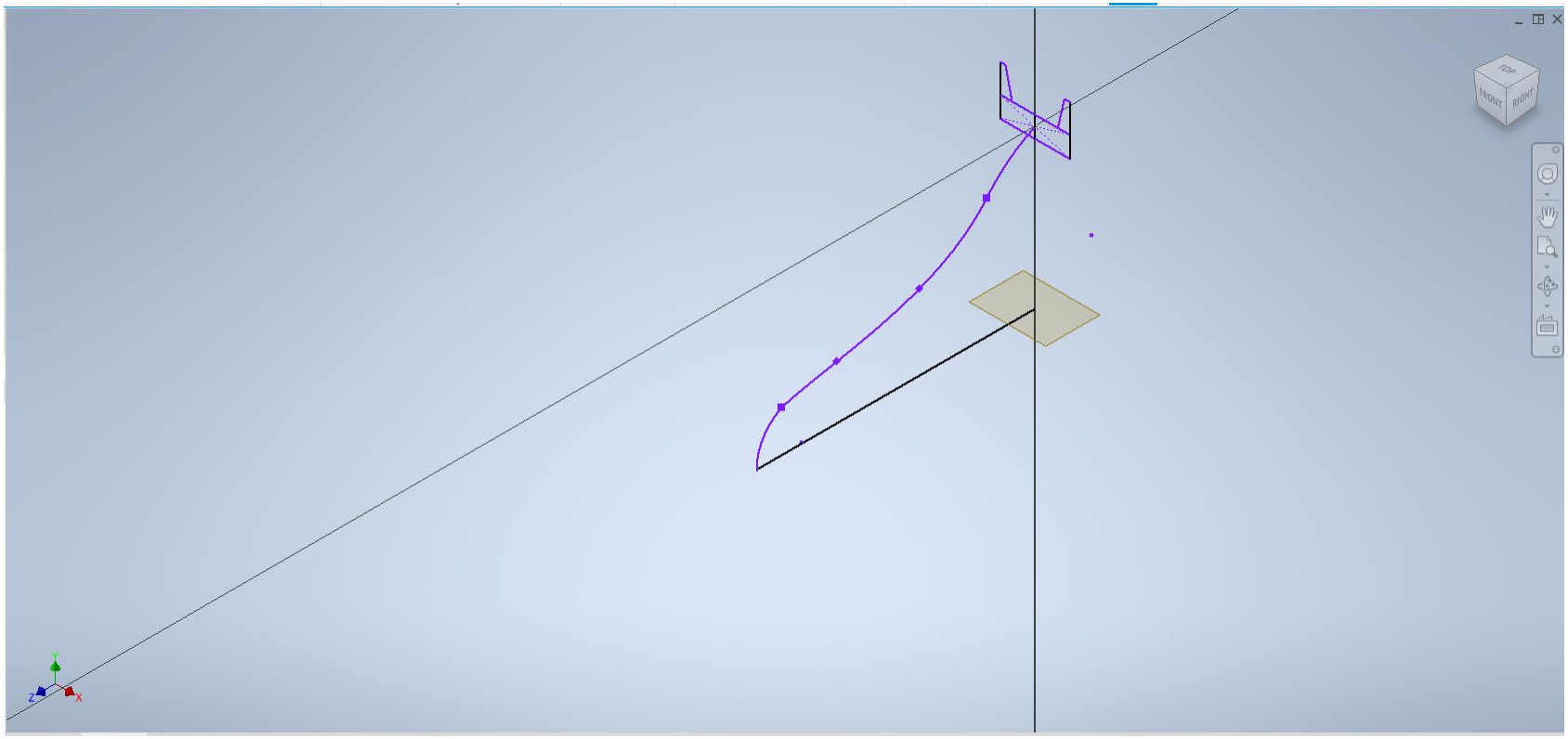

Sweep a Toolbody Along a Path

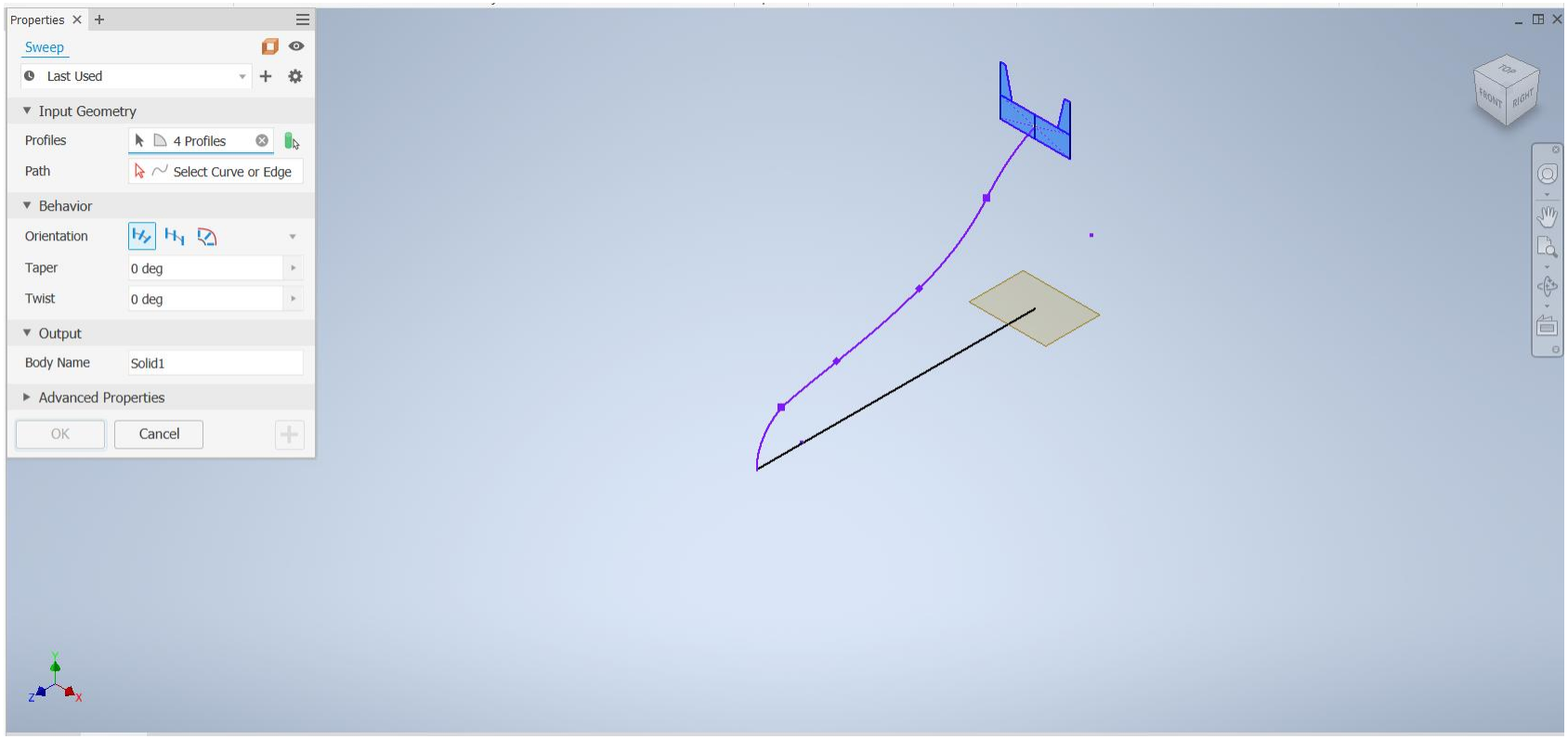

Sweep a Toolbody Along a Path

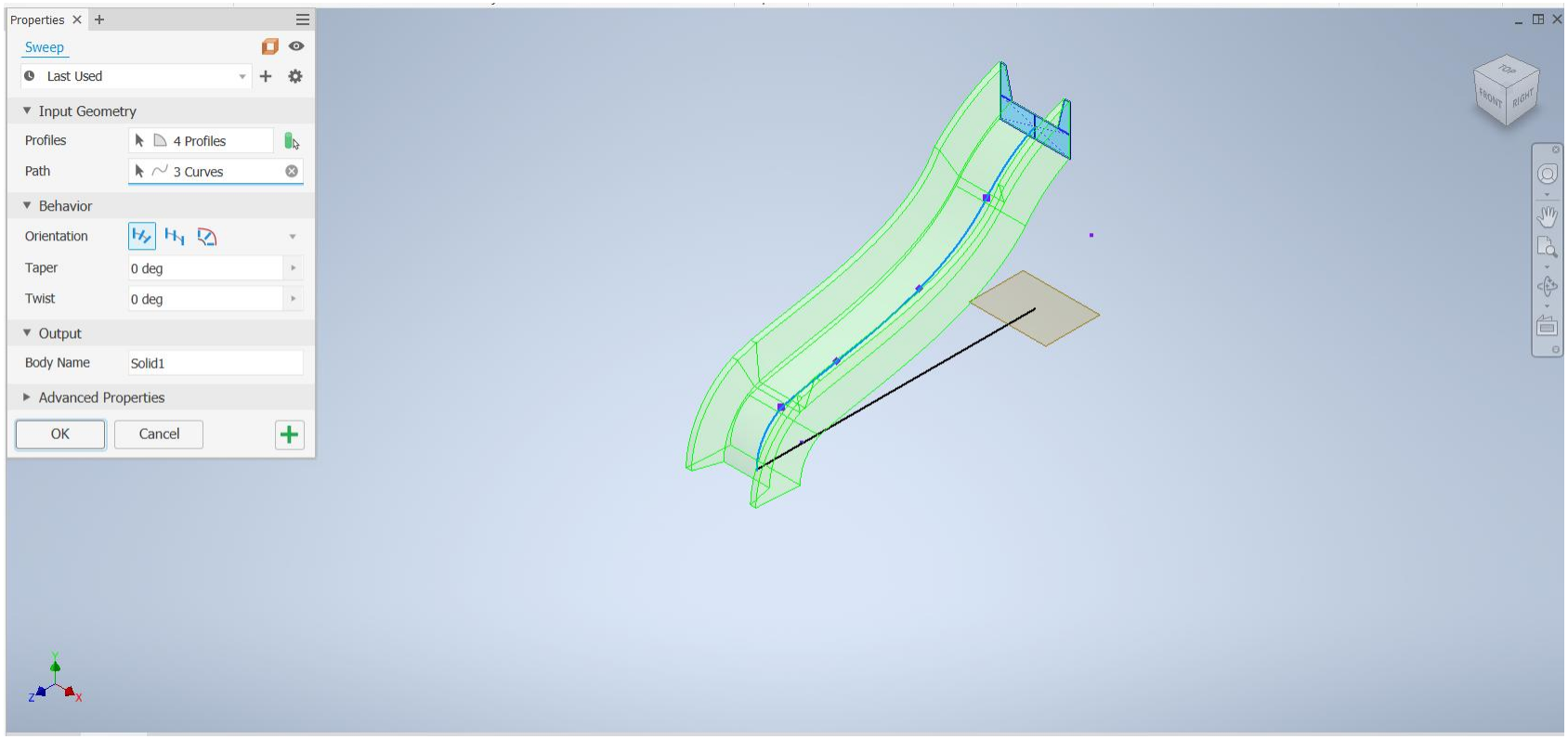

Sweep a Toolbody Along a Path

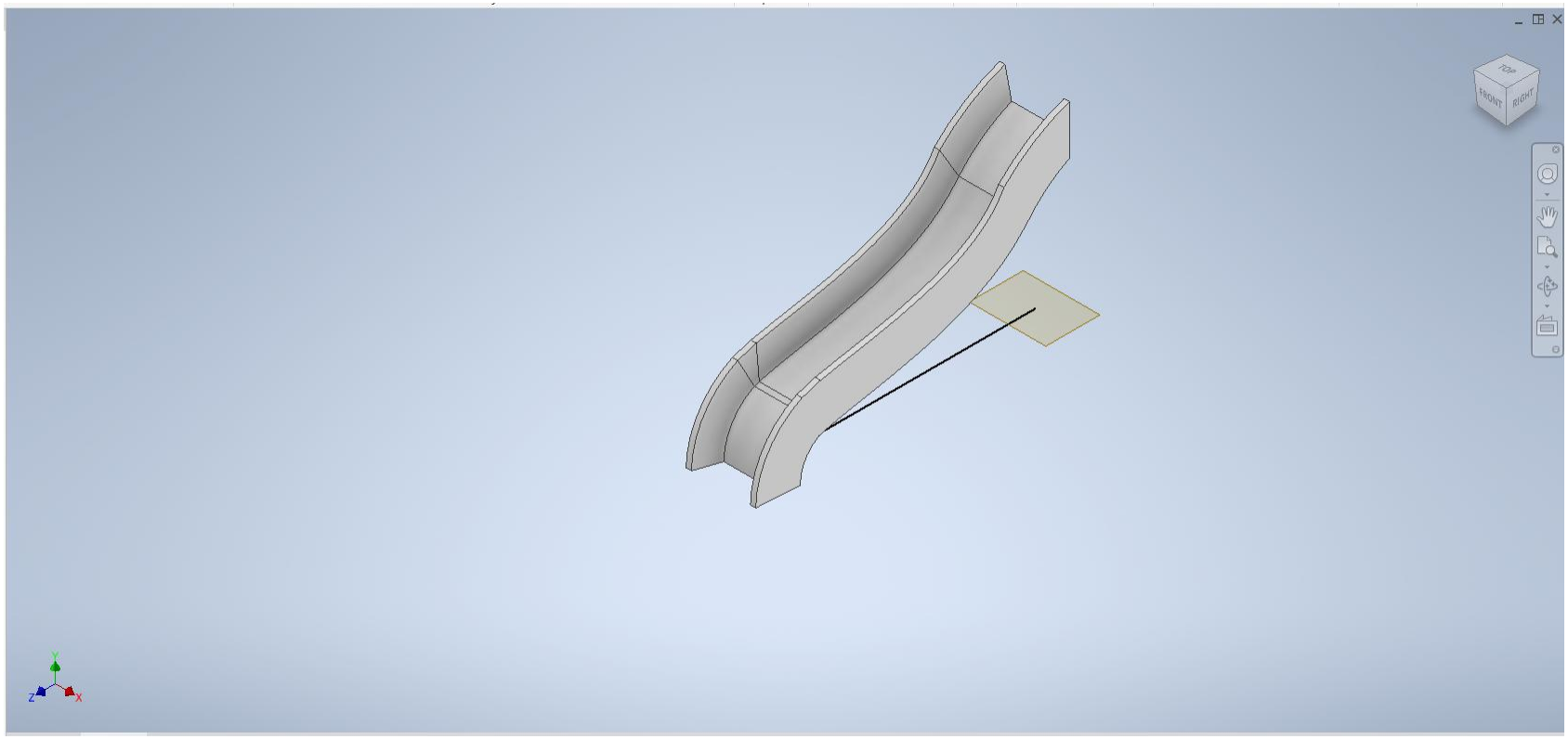

Sweep a Profile Along a Path

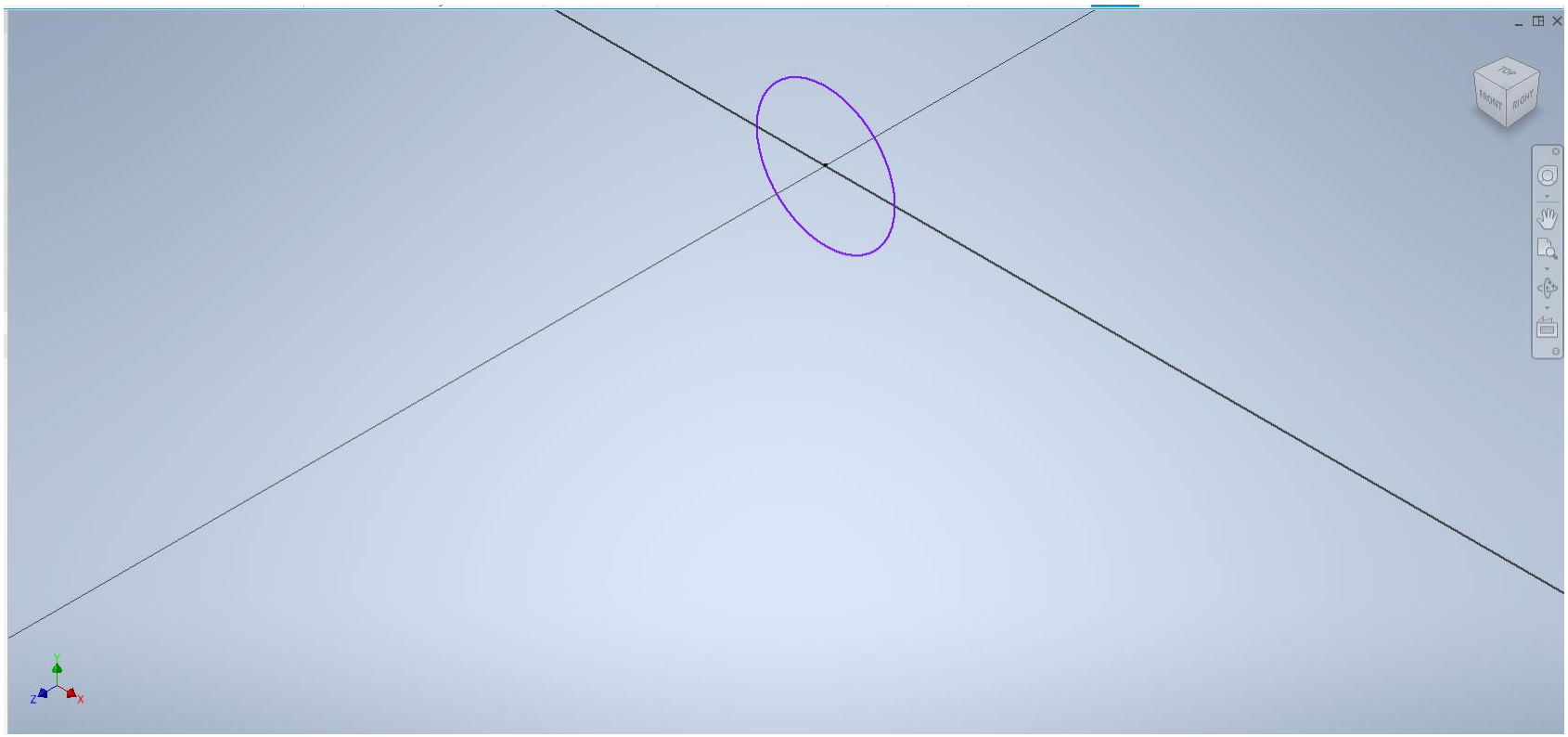

Sweep a Profile Along a Path

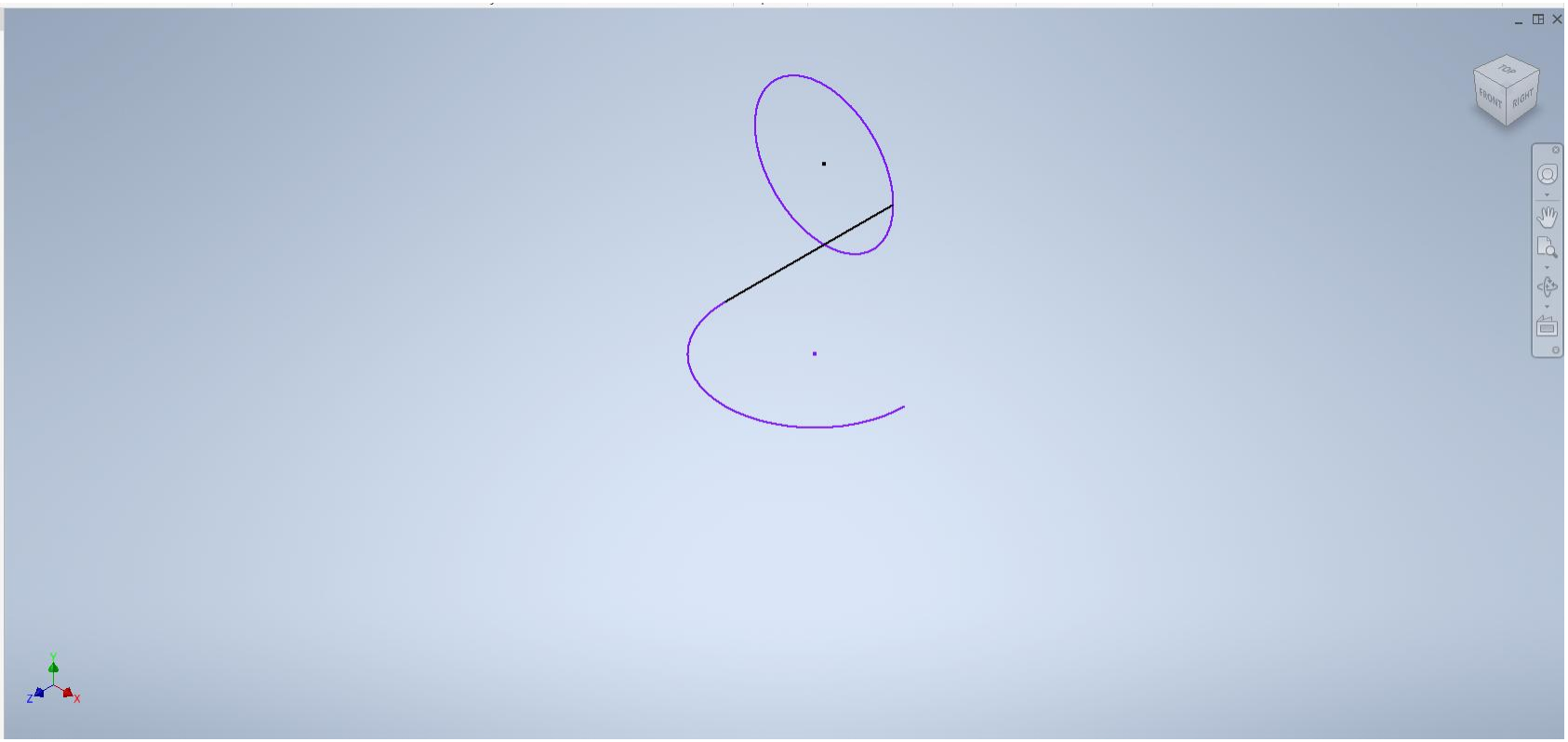

Sweep a Profile Along a Path

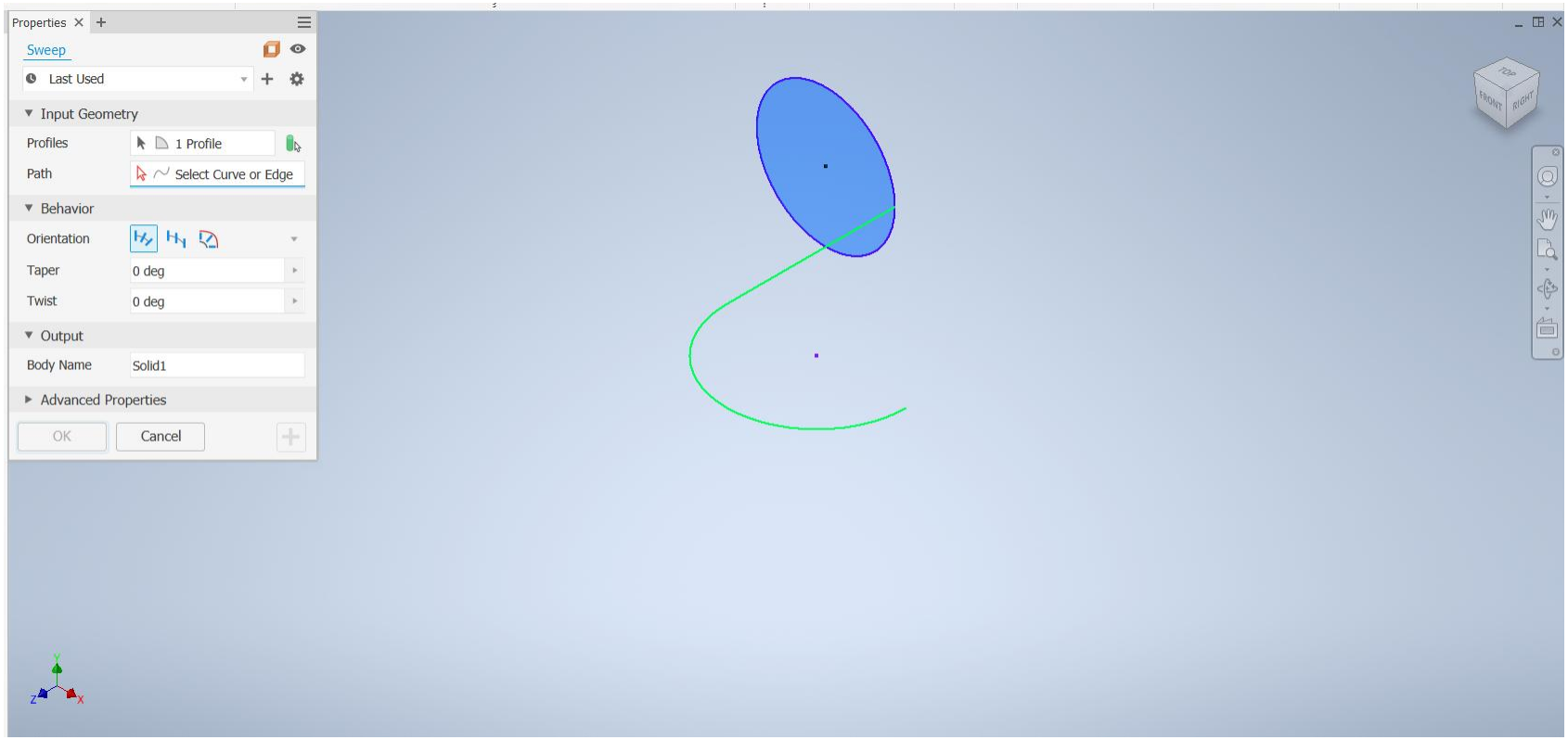

Sweep a Profile Along a Path

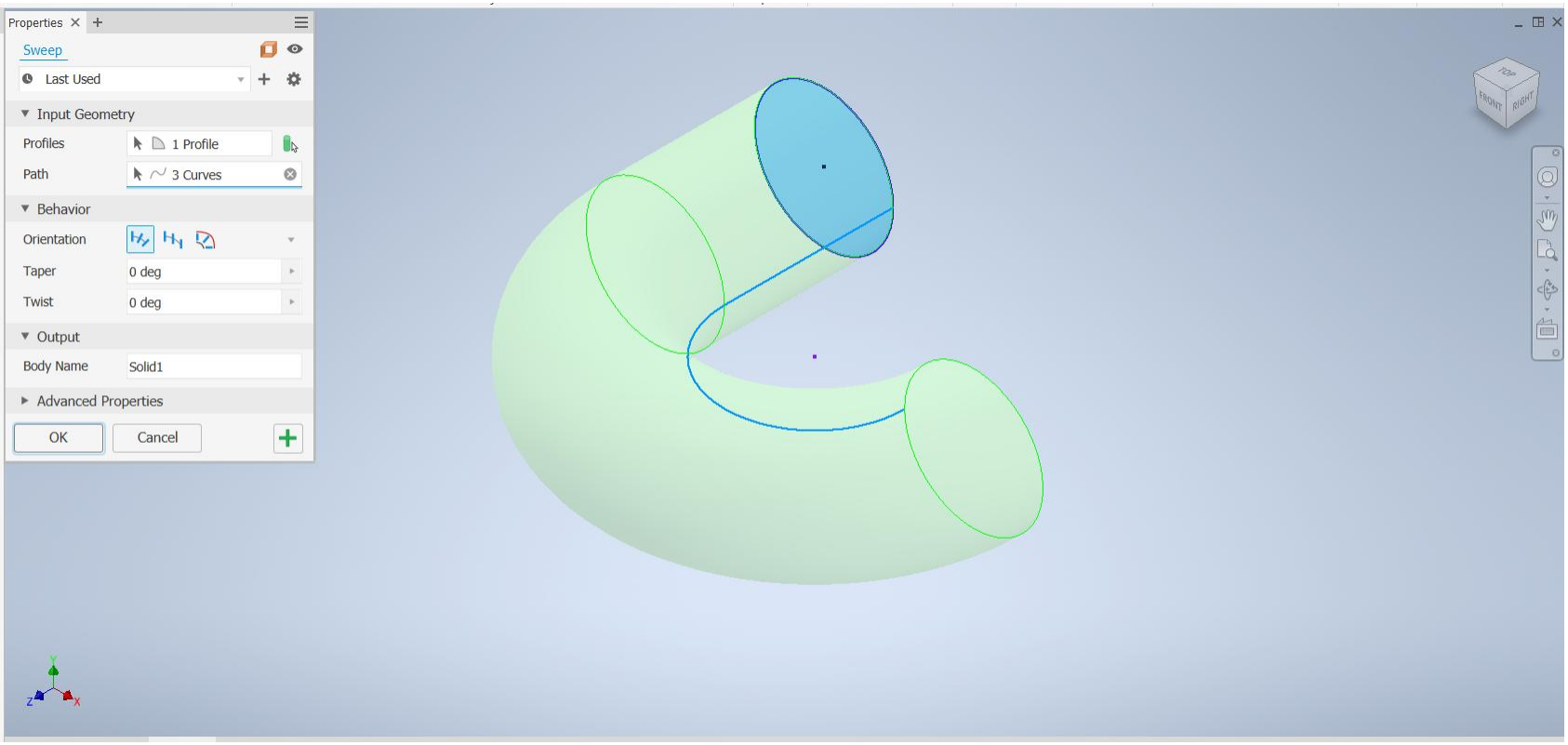

Sweep a Profile Along a Path

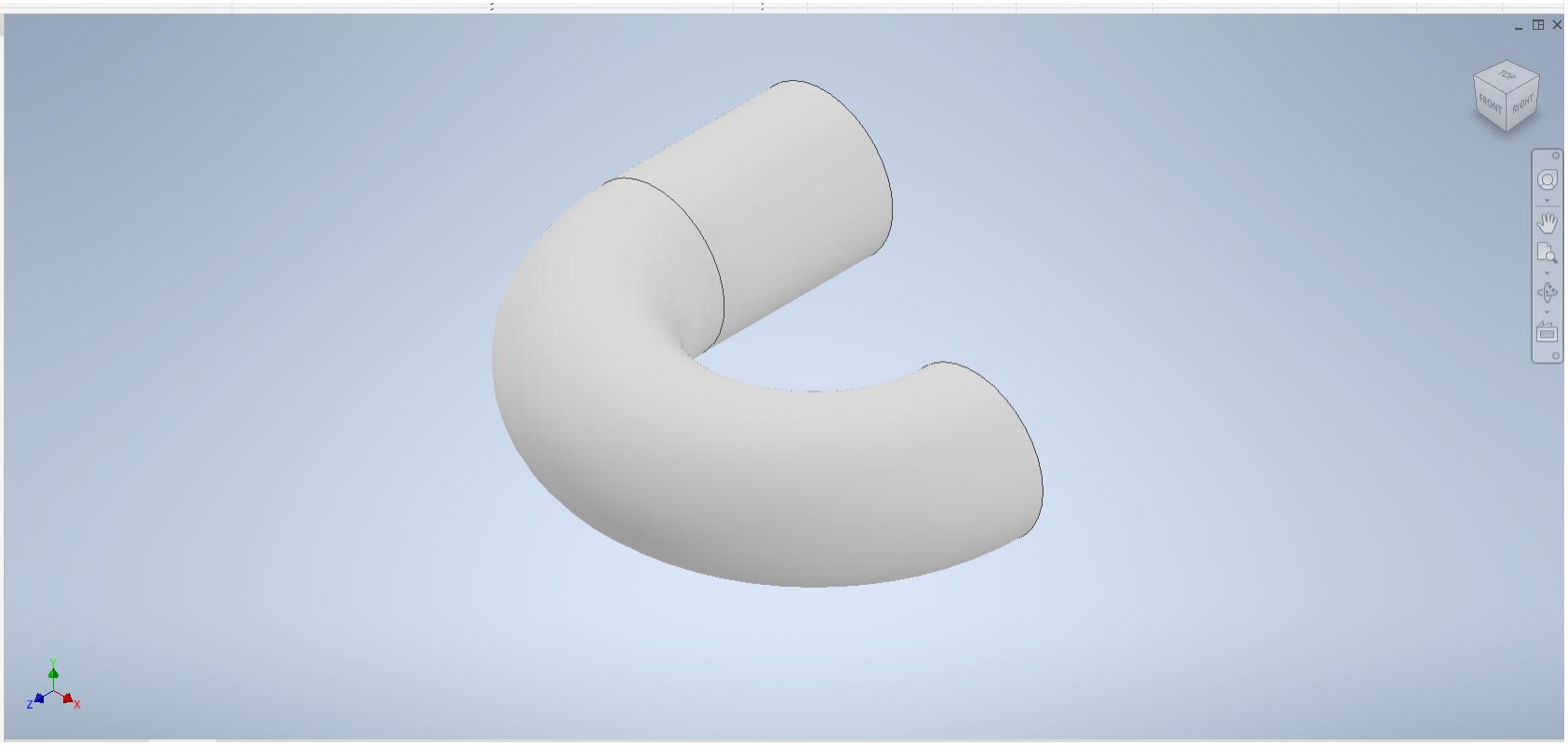

Sweep a Profile along a Path and Guide Rail

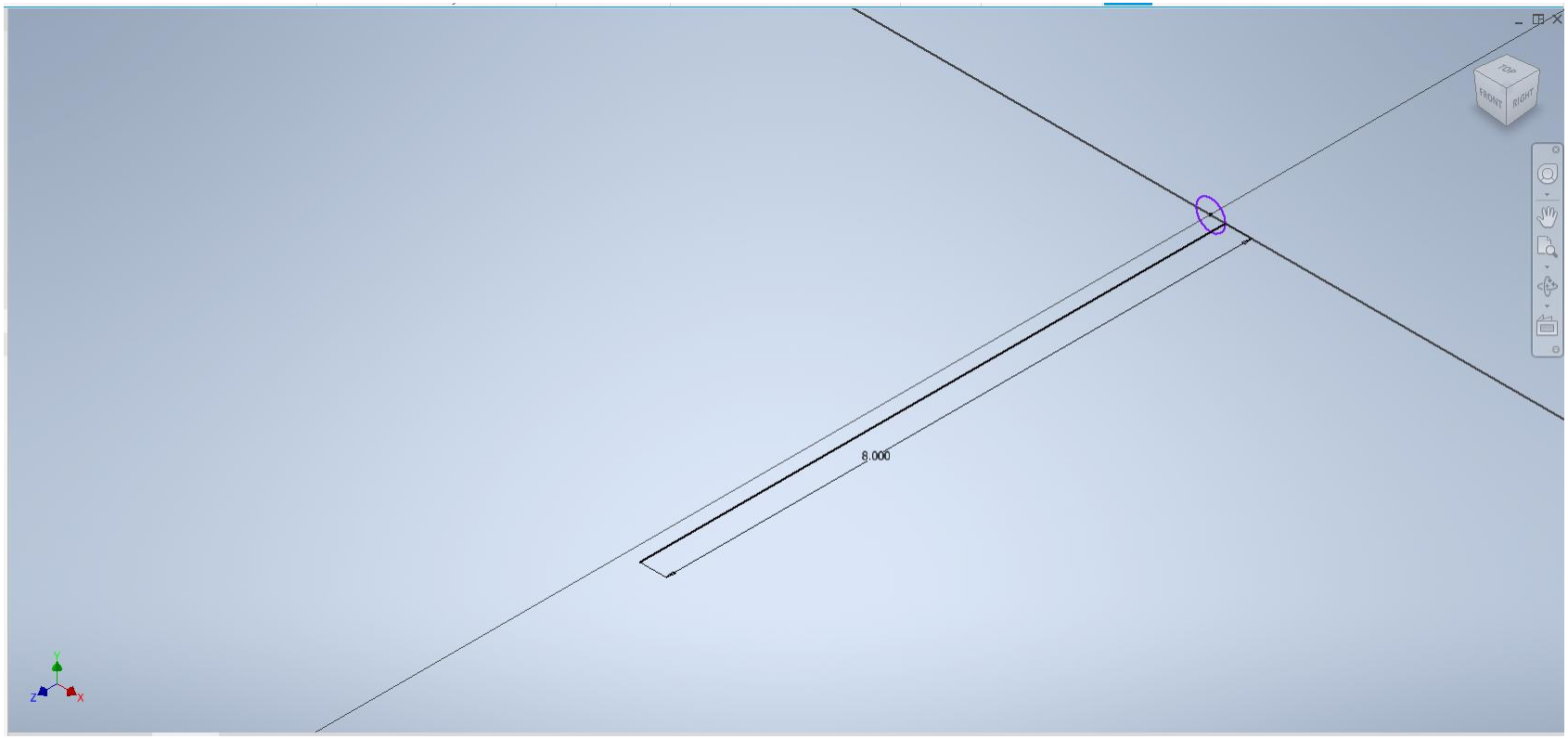

Sweep a Profile along a Path and Guide Rail

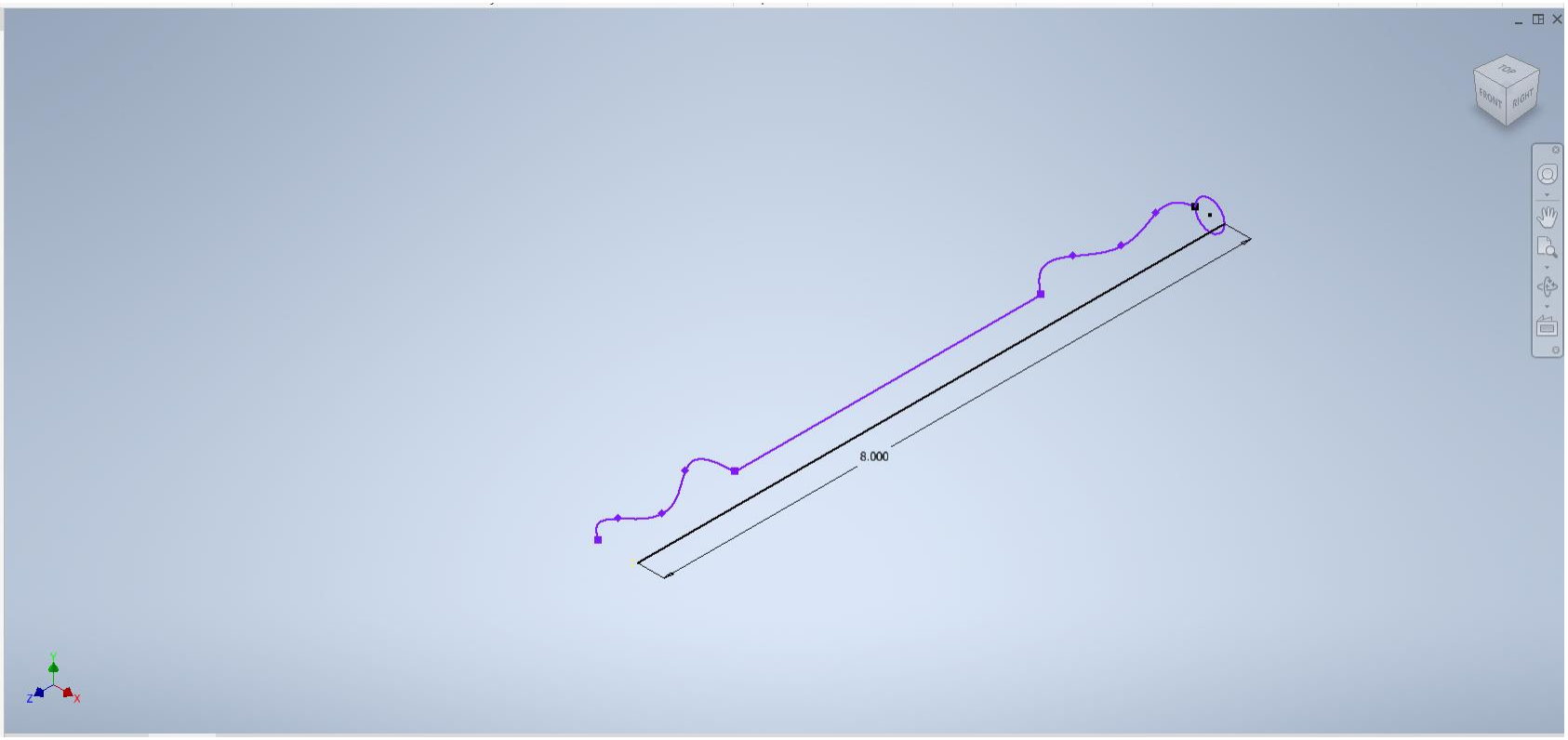

Sweep a Profile along a Path and Guide Rail

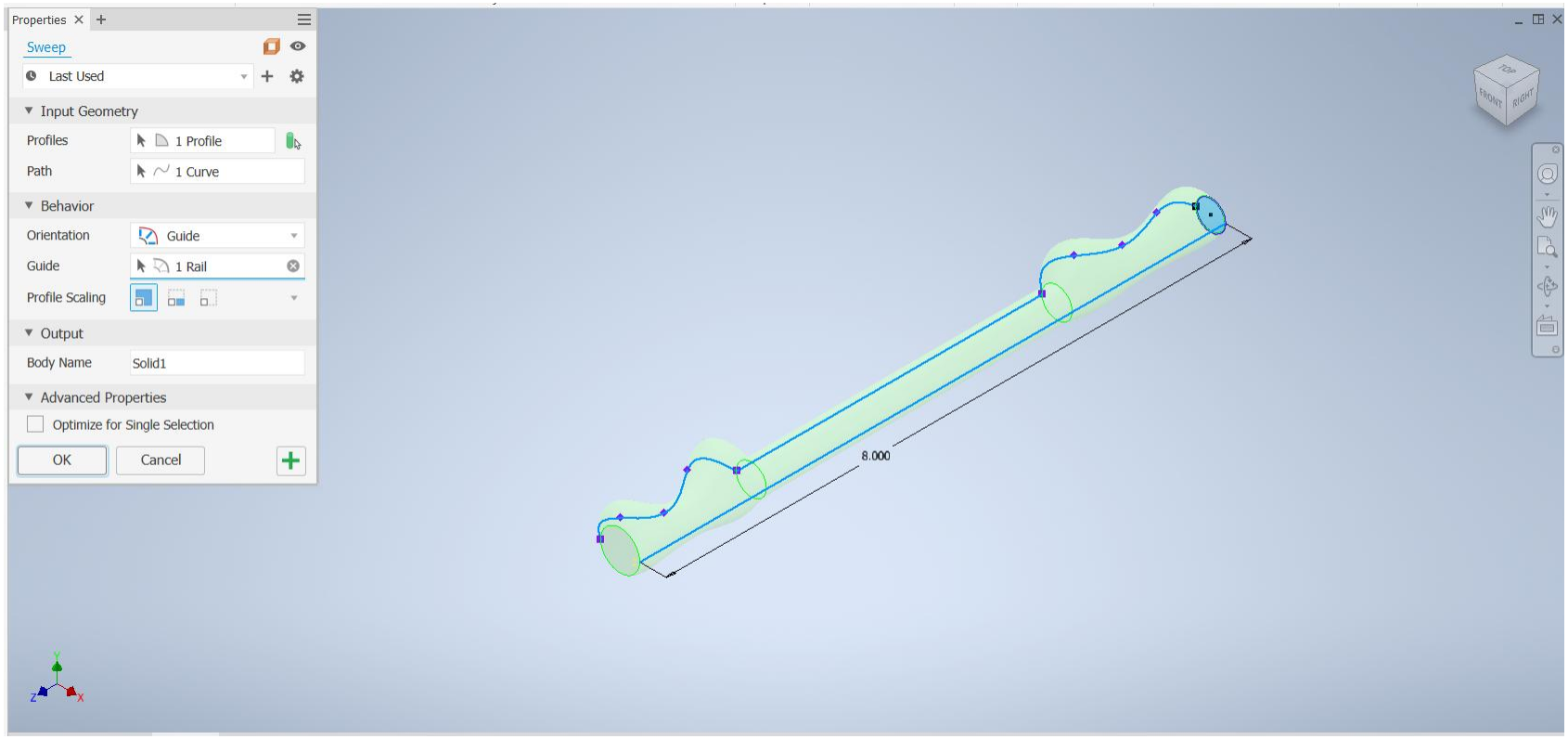

Sweep a Profile along a Path and Guide Rail

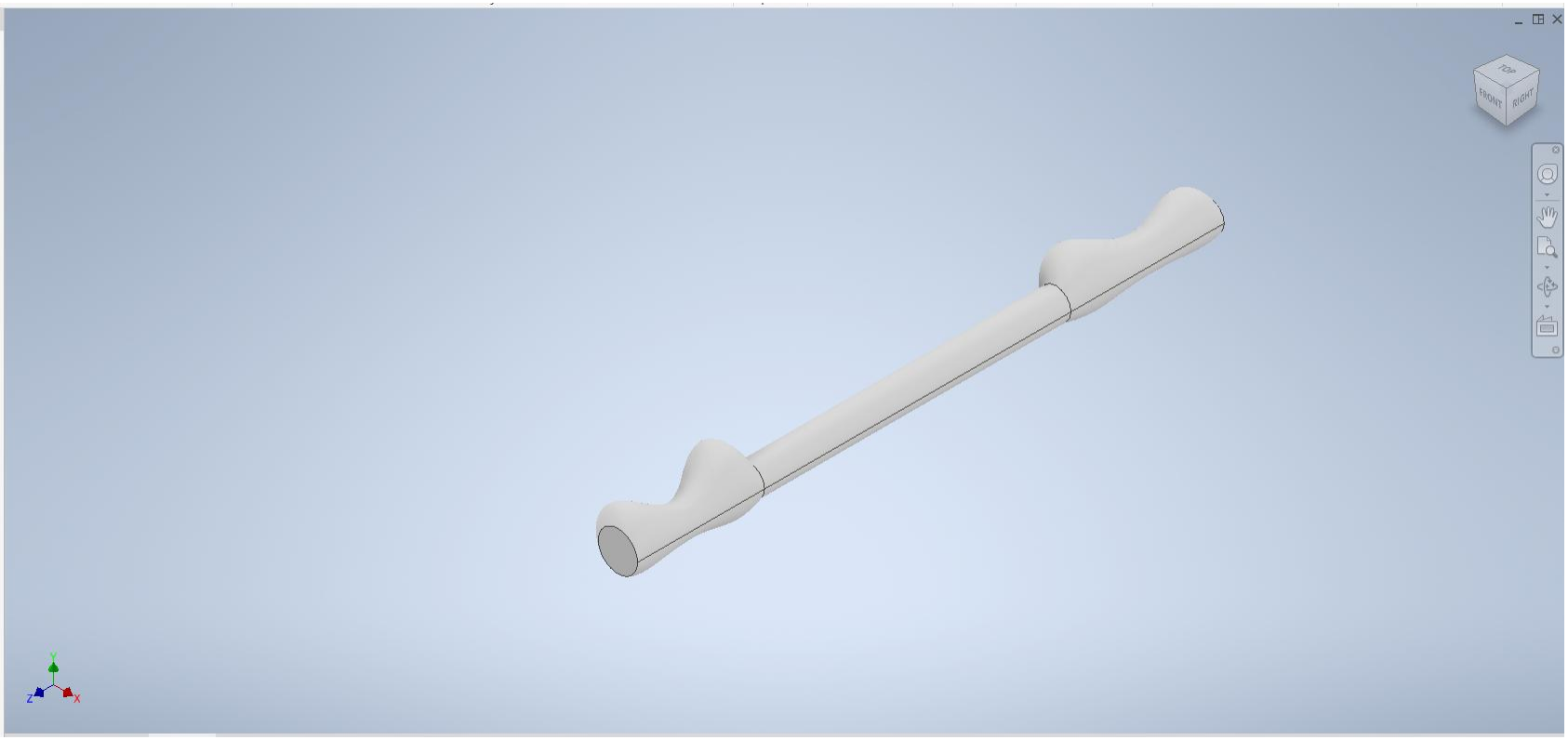

Revolve

- Creates a feature or a body revolving one or more sketched about an axis

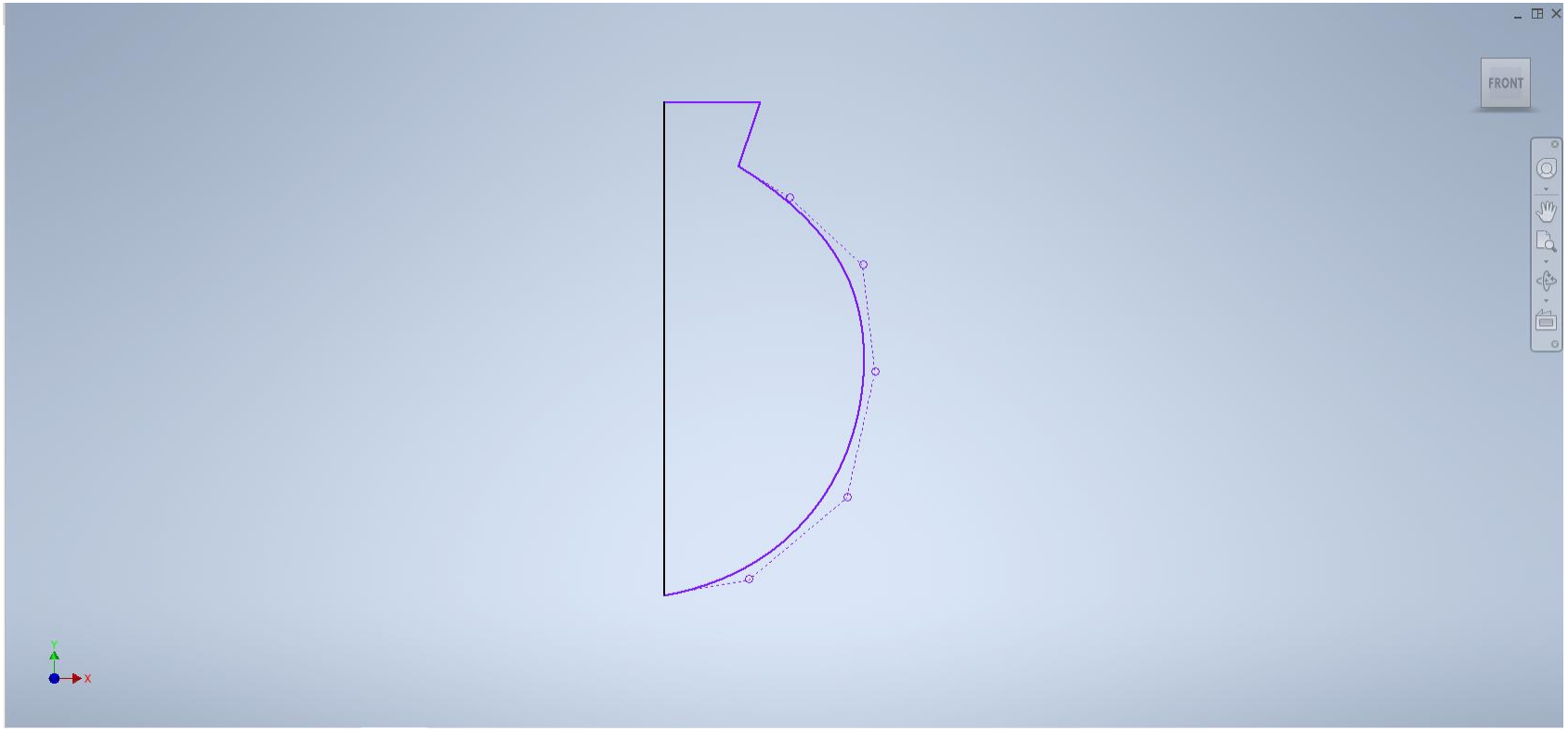

Revolve

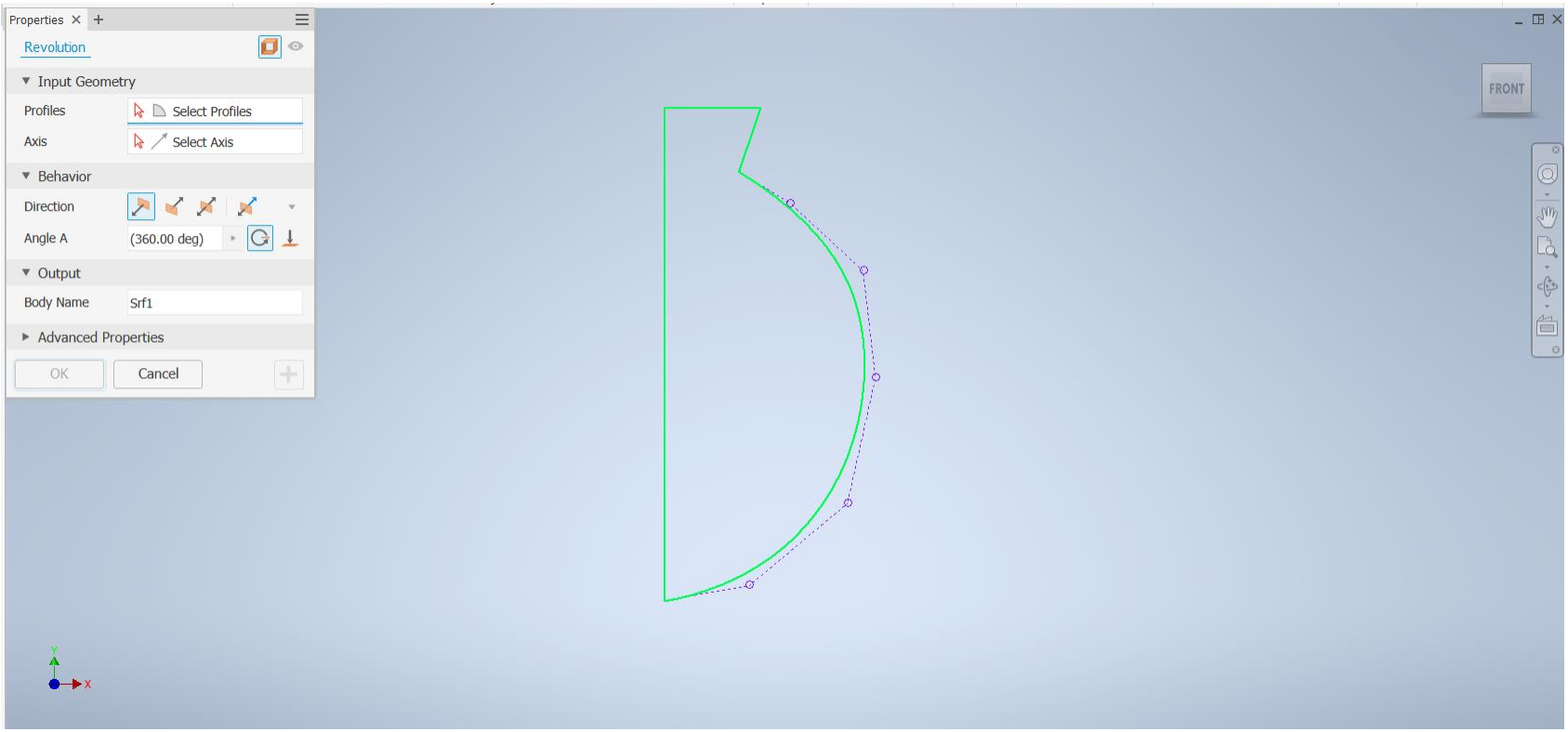
Properties
Revolution
Input Geometry
Profiles
Select Profiles
Axis
Select Axis
Behavior
Direction
Angle A
(360.00 deg)
Output
Body Name
Srf1
Advanced Properties
OK
Cancel
FRONT
Y
X

Revolve

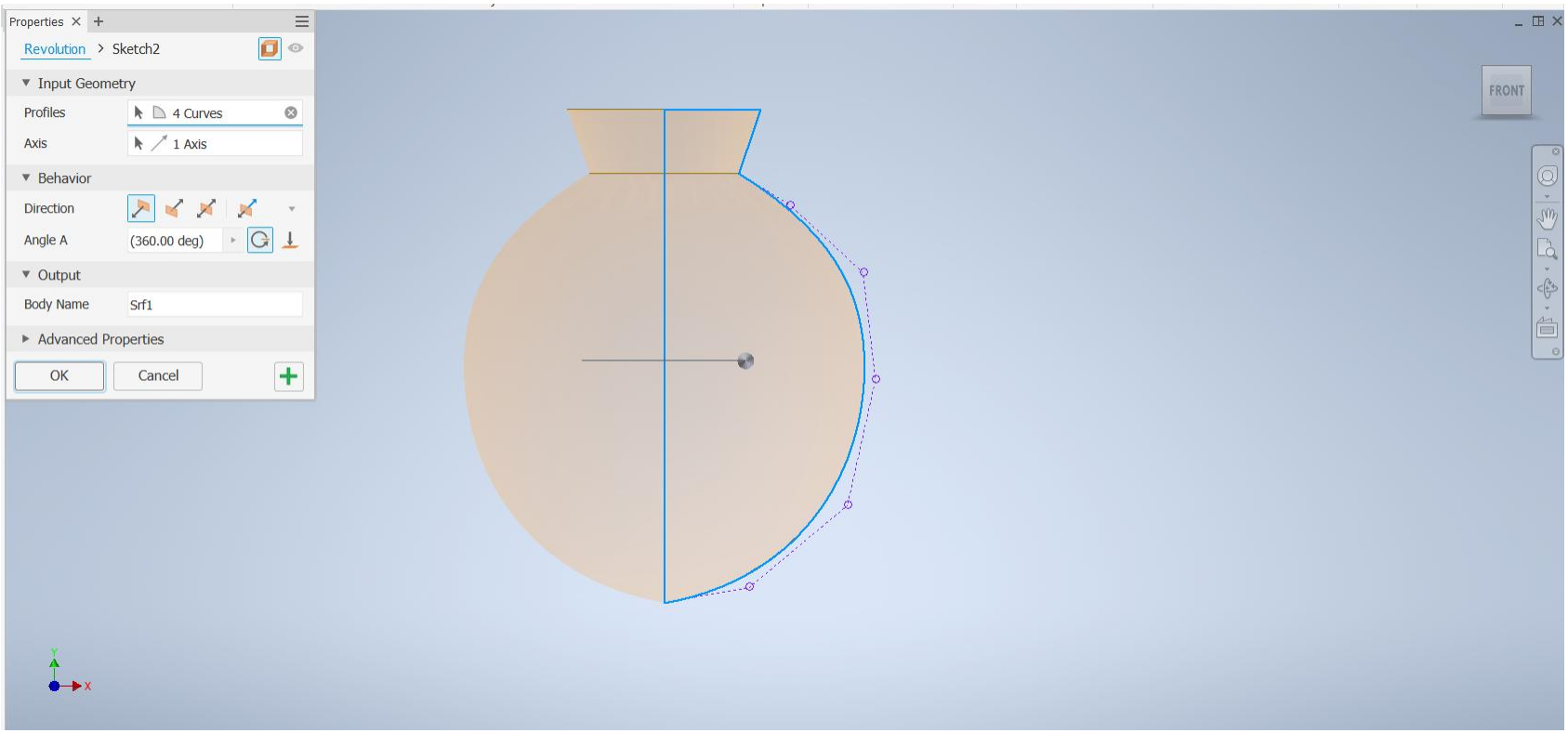
Properties
Revolution > Sketch2
Input Geometry
Profiles
4 Curves
Axis
1 Axis
Behavior
Direction
Angle A
(360.00 deg)
Output
Body Name
Srf1
Advanced Properties
OK
Cancel
FRONT

Revolve

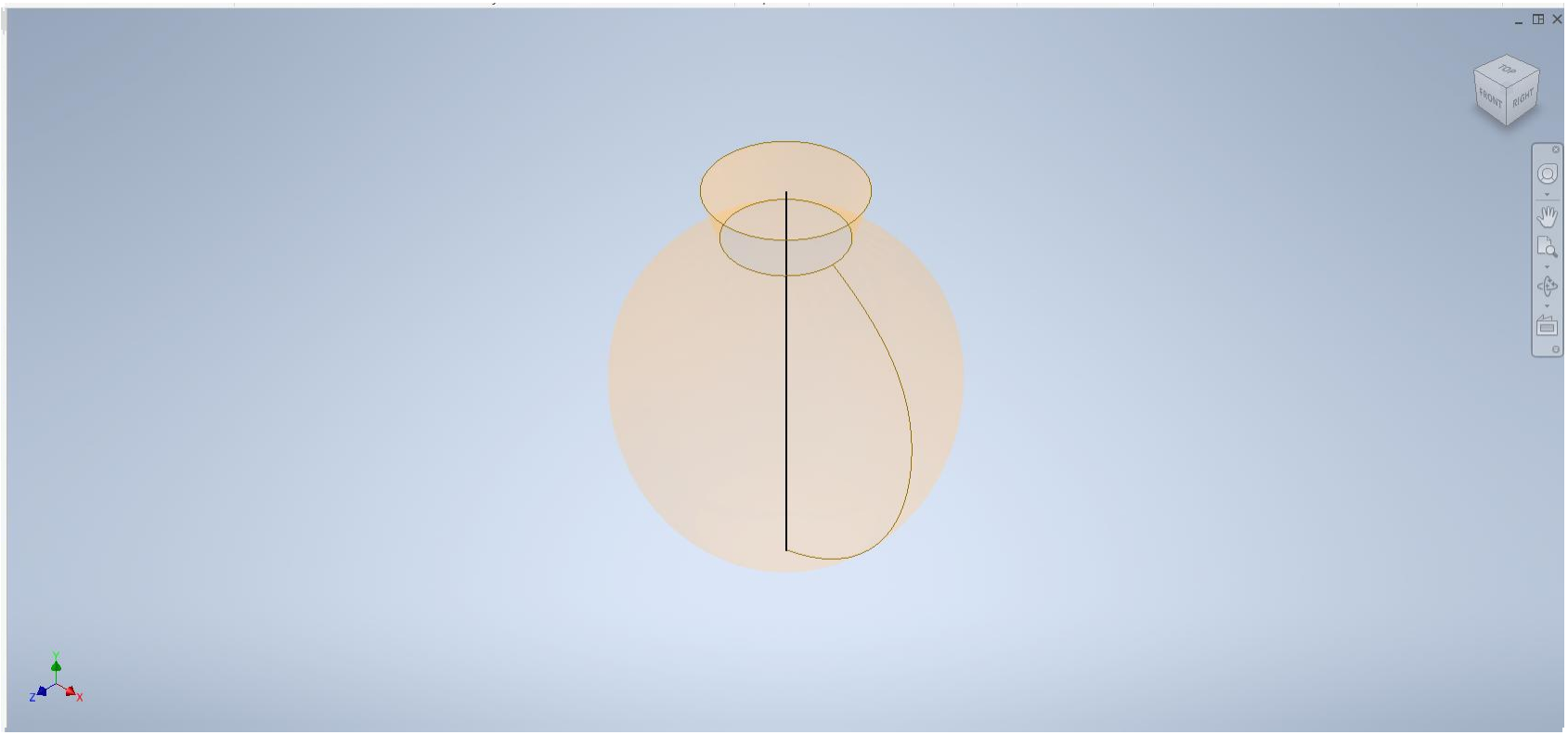

Hands on Section - 1

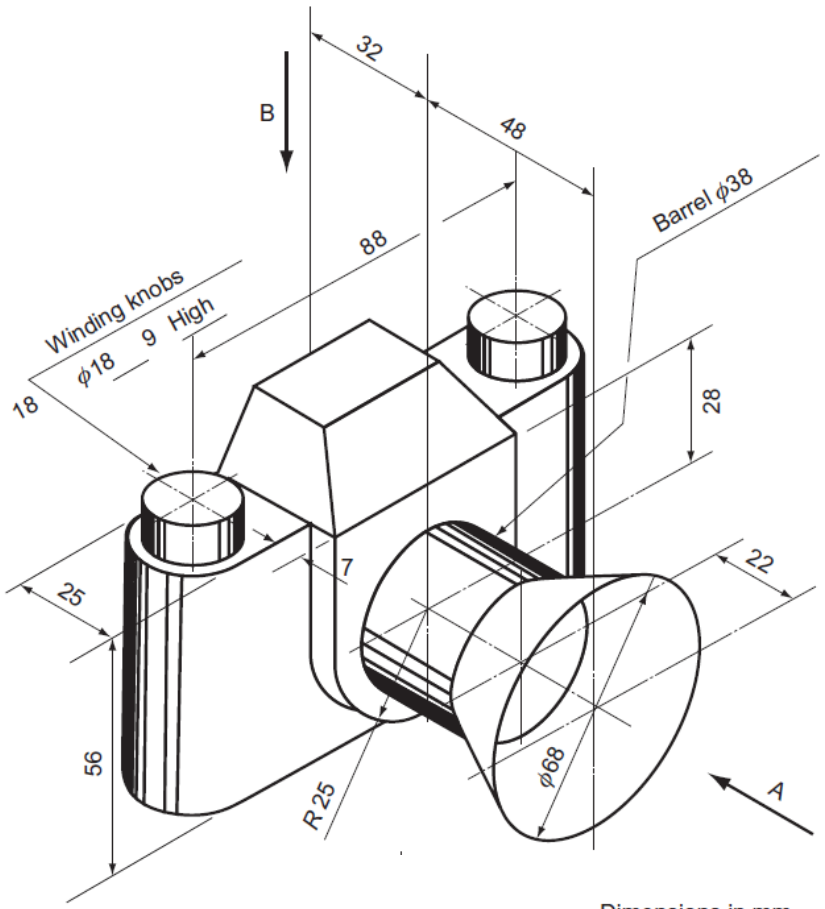

Dimensions in mm

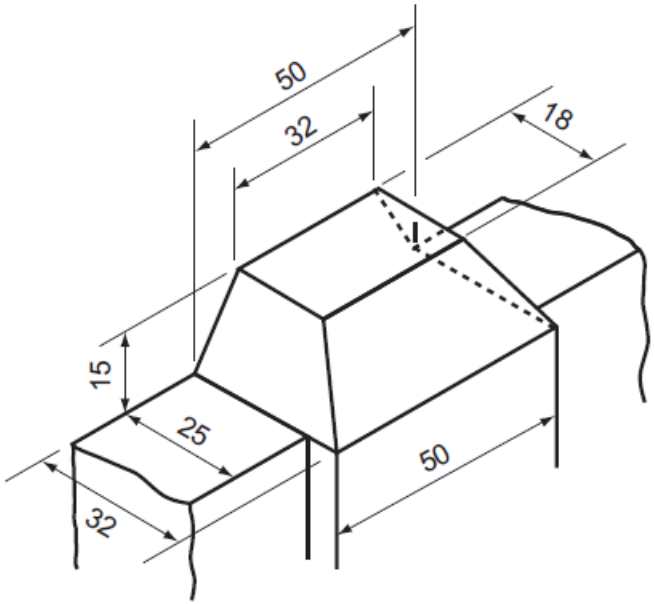

Hands on Section - 2

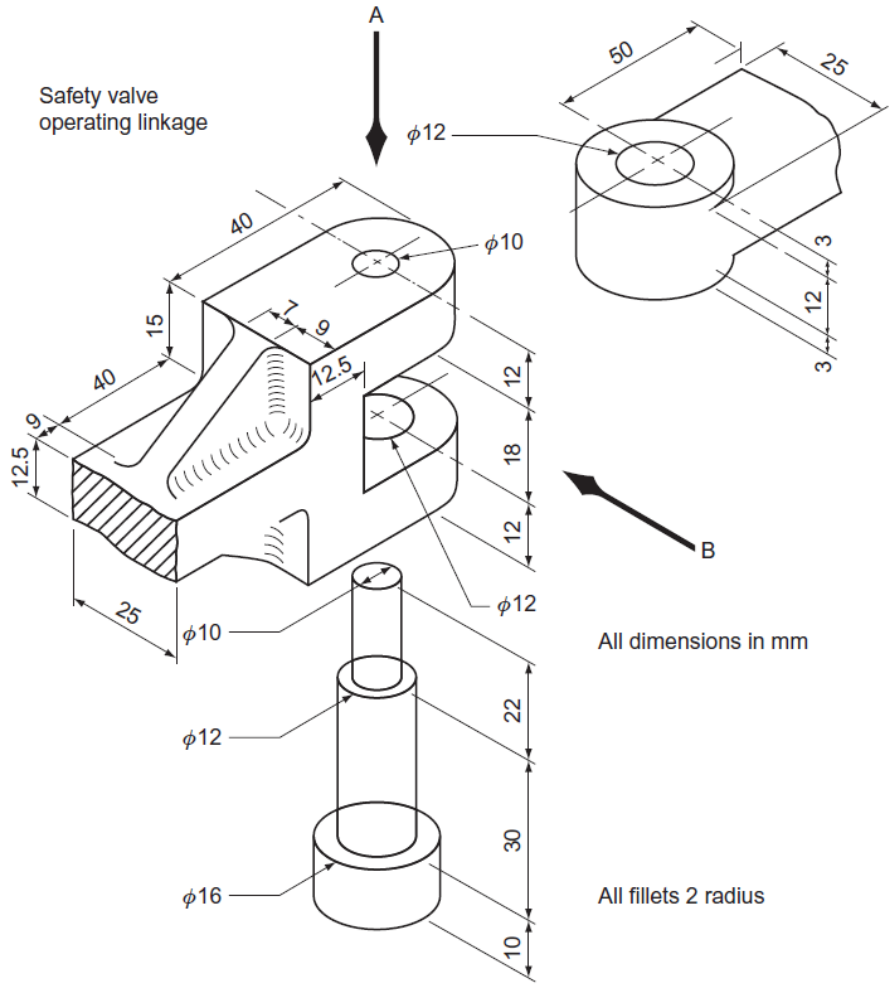

Happy Halloween